Spare Parts Catalog

4 WG 201(5)

Material number: 4644.034.002

ZF Friedrichshafen AG
Hauptverwaltung
80038 Friedrichshafen
Deutschland
Telefon: +49 7541 77-0
Telefax: +49 7541 77-908000
www.zf.com

zuständiges Werk:
Passau

© All rights reserved by ZF Friedrichshafen AG 2011, even in the event of applications for copyright. We hold all rights of disposal, such as the right to copy and disseminate. All rights reserved.
For information only, not subject to the amendment service.

Notes relating to the spare parts catalog

Setup of the spare parts catalog

- Cover sheet
- Tecnical Cover (only in SDM print)
- Overview of figures
- Figure
- Associated parts list
- Next figure
- Associated parts list
- ...

Overview of figures

Bildtafel Figure	Sachnummer Product number	Benennung (Description)	Technische Info Technical info	Description (Benennung)	Menge Quantity	Einheit Unit
068.08.17	1316.170.001	AUSLEGER	WL	SHIFT TURRET	1	Stk
068.08.06	1316.170.031	DECKEL	WL*H-H *VM	COVER	1	Stk
068.08.14	1316.170.808	DECKEL	WL*AUSL+GEH*H-H*HF160N	COVER	1	Stk
08	1316.170.441	ANSCHLUSSTEILE	WL*NG-VORB*RG-SCHL*168N *BAJONETT	CONNECTING PARTS	1	Stk

The "gap" indicates that there is no separate graphics panel (poster) for this assembly
The parts of this assembly are shown with the same mid-section number on the figure

Figure and parts list

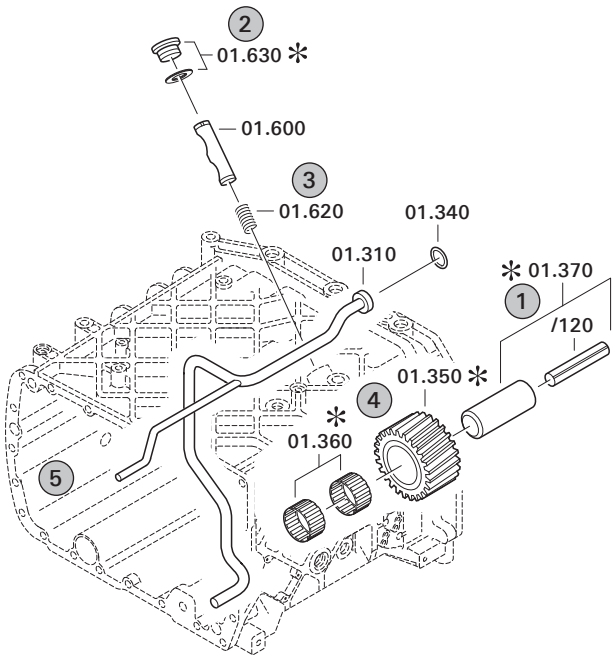

1 Positions and subpositions

Pos.	Sachnummer Product number	Benennung (Description)	Technische Info Technical info	Description (Benennung)	Menge Quantity	Einheit Unit
0370	1315.201.054	RUECKLAUFBOLZEN	KPL.16S151*SG*L= 79	REV.IDLER SHAFT	1	Stk
/0120	0631.329.293	SPANNSTIFT		SLOT. PIN	1	Stk

Positions marked with "/" are the individual items of a completion
For example: Position 0370 contains a centering pin with the position /0120

2 Combinations with standardized parts

Pos.	Sachnummer Product number	Benennung (Description)	Technische Info Technical info	Description (Benennung)	Menge Quantity	Einheit Unit
0630		VERSCHL.SCHR.		SCREW PLUG	1	Stk
	0636.302.067	VERSCHL.SCHR.		SCREW PLUG	1	Stk
	0634.801.249	DICHTRING	A 26 X 31	SEALING RING	1	Stk

The parts list shows the components included in the combination of standardized parts

3 Depiction of position/item number on the figure and in the parts list

01.620 - on the figure 01 relates to the assembly in which the position is included. Due to program-related reasons, it is shown on the figure.

0620 - in the parts list

Pos.	Sachnummer Product number	Benennung (Description)	Technische Info Technical info	Description (Benennung)	Menge Quantity	Einheit Unit
0620	0732.040.736	DRUCKFEDER		COMPRESSION SPRING	1	Stk

4 ✻-Positions

Positions marked with an ✻ are optional i.e. inclusion in the parts list is not mandatory.
The following note is shown on the figure

✻	je nach Stücklistenausführung depending on spec. number suivant la nomenclature secondo la distina base

5 Parts, dotted display

Parts with dotted display on the figure are only used for orientation of other parts

Material number: 4644.034.002 **4 WG 201(5) /**

Pos.	Information	Amendment number
	KUNDE:TERBERG	
	IDENT-NO:	
	VEHICLE DATA:	
	TERMINALSCHLEPPER	
	VEHICLE WEIGHT: LOADED 8,20T-65,00T-100,00T	
	MOTOR: VOLVO D7B-230	
	ENGINE POWER: P=169 KW IN N=2200 UPM	
	ENGINE PERFORM.ACC.TO TRACTIVE EFFORT CALCUL.	
	DREHMOMENT: T= 820 NM BEI N=1600 UPM	
	REIFEN: 13R-22.5	
	R.DYN. 0,519 M	
	AXLE RATIO:I A-TOTAL.= 16,50	
	ENDGESCHWINDIGK.: 31,0 / 26,0 / 14 KM/H	
	FAHRLEIST.BERECHNUNG: 4644 710 024/025/026	
	VEHICLE DATA:	
	TERMINALSCHLEPPER	
	VEHICLE WEIGHT: LOADED 11,00T-65,00T-150,00T	
	MOTOR: DB OM 442	
	MOTORLEISTUNG: P=213 KW BEI N=2100 UPM	
	ENGINE PERFORM.ACC.TO TRACTIVE EFFORT CALCUL.	
	DREHMOMENT: T=1100 NM BEI N=1300 UPM	
	REIFEN: 13R-22.5	
	R.DYN. 0,519 M	
	ENDGESCHWINDIGK.: 32,0 / 26,0 / 13 KM/H	
	FAHRLEIST.BERECHNUNG: 4644 710 369/370/373	
	VEHICLE DATA:	
	TERMINALSCHLEPPER	
	FAHRZEUGMASSE: BELADEN: 11,00T/65,00T/180,00T	
	MOTOR: VOLVO D7B-260	
	MOTORLEISTUNG: P=191 KW BEI N=2200 UPM	
	DREHMOMENT: T=1100 NM BEI N=1300 UPM	
	REIFEN: 13R-22.5	

© All rights reserved by ZF Friedrichshafen AG 2011, even in the event of applications for copyright. We hold all rights of disposal, such as the right to copy and disseminate. All rights reserved.

Pos.	Information	Amendment number
	R.DYN. 0,519 M	
	ENDGESCHWINDIGK.: 31,0 / 26,0 / 12 KM/H	
	FAHRLEIST.BERECHNUNG: 4644 710 027/028/029	
	PRODUCT DESCRIPTION:	
	TYP: 4WG-201	
	RATIOS TOTAL:	
	FORWARD:	
	1.G=5,813 2.G=2,519 3.G=0,982 4.G=0,636	
	REVERSE:	
	1.G=5,813 2.G=2,519 3.G=0,982	
	HIGH GEARING: INPUT	
	INPUT:	
	DIRECT FLANGE ATTACHMENT	
	DIAPHRAGM	
	SAE-CONNECTION: 2	
	OUTPUT:	
	FLANSCH: RE.D=150*70GR KR.VERZ.	
	POWER TAKE-OFF(P.T.O):	
	KOAX.MOTORABH.: FL.SAE-B 2-L	
	COAX ENGINE DRIV:SPL.SAE-B/16/32 DP/13T	
	REVERSING GEAR DRIVEN: N0	
	TURB.DRIVEN NO	
	CONTR.MECH.: NO	
	GEAR SELECTION:	
	CODE: G	
	ELECTRICAL	
	MOUNTING POSIT.: LATERAL AT THE GEARBOX ABOVE	
	VOLTAGE: 24 VOLT	
	OPERATING PRES.: 16+2 BAR	
	PRESSURE CONTROL:4,0-13 BAR NO.23	
	CONNENCTION WIRING:CANNON SCREW CONNECTION	
	OIL INLET TO CONTROL:GEAR BOX	

© All rights reserved by ZF Friedrichshafen AG 2011, even in the event of applications for copyright. We hold all rights of disposal, such as the right to copy and disseminate. All rights reserved. **22.12.2011**
For information only, not subject to the amendment service. **4**

Pos.	Information	Amendment number
	REPLENISHING OIL:WITH	
	CONVERTER LOCK-UP CONTROL: WITHOUT	
	DOUBLE PRESSURE CONTROL VALVE: WITHOUT	
	SPERRBAR: NEIN	
	PRESS.CUT-OFF: WITHOUT	
	SETTING SPECIFICAT.:4644 700 676 IN 467	
	TEMP.SCHALTER: MIT GEBER UND SCHALTER	
	WARNING SWITCH F.OIL PRESSURE:WITH	
	GEAR SELECTOR:	
	TYPE: DW 2 MIT EST-25	
	WIRING: WITH	
	INDUCTIVE SENSOR,TURBINE SIDE: KOSTAL (M24X1)	
	INDUCTIVE SENSOR, OUTPUT SIDE: KOSTAL M24X1	
	PARKING BRAKE: WITHOUT	
	SPEEDOMETER: WITHOUT	
	OELMESSSTAB: J 2 (KURZ)WANDLERSEITIG	
	AXLE DISCONNECT: NO	
	ZF-FILTER: INTEGRATED	
	T-CONVERTER:	
	BEZEICHNUNG: 30 H 073	
	CHARACTERISTICS: 02 G 056 51 L.F.	
	START.TORQUE RAT.:1,91	
	STATOR FREEWHEEL:WITHOUT	
	BREAK FREEWHEEL: WITHOUT	
	INERTIA TORQUE: J=0,15 KGM2	
	LOCK-UP CLUTCH: WITHOUT	
	GROUND DRIV.PUMP: WITHOUT	
	INCH-VALVE: WITHOUT	
	DRAWINGS:	
	SCHNITT: 4644 081 001(0)BL.1-4	
	EINBAU: 4644 634 002(0)	
	MOTOR-ANBAU: 4644 500 476(1)	

© All rights reserved by ZF Friedrichshafen AG 2011, even in the event of applications for copyright. We hold all rights of disposal, such as the right to copy and disseminate. All rights reserved. **22.12.2011**
For information only, not subject to the amendment service. **5**

Pos.	Information	Amendment number
	TRANSM.DIAGR. SEE INSTALL.DRAWING	
	OIL DIAGRAMM:4644 700 627 IN ...626	
	CALCULATIONS:	
	ZUGKRAFT: SIEHE FAHRZEUGDATEN	
	TEST SPECIFICATION	
	DRAWING FOR ELECTR.PARTS	
	FAHRSCHALTER:6006 630 026( )EBZ	
	CONTROL UNIT:6009 654 001	
	STROMLAUFPL.:6029 700 807( )	
	STROMLAUFPL.:6006 700 582( )FS	
	ANSCHL.PLAN: 6029 700 820( )	
	DATENZEICHNG:6009 747 539( )	
	DATENZEICHNG:6009 747 545( )	
	OIL CAPACITY:	
	PHOSHATESTER: NO	
	MAIN TRANSMISSION: CA.26,00 L	
	OIL FILLING: NO	
	OIL GRADE:SPECIFICATION TE ML 03 / TRANSMISSION	
	GESAMT-TROCKENMASSE: 329KG	
	COLOR: OXIDROT RAL 3009	
	PACKING:	
	ASSEMBLY INSTRUCTION:	
	LOCATION OF CABIN:	
	MISCELLANEOUS/REMARKS:	
	SEPARATE BESTELLUNG DER AUTOMATIK	
	STEUERUNG 6009 047 539(DISPLAY 4 GANG)	
	STEUERUNG 6009 047 777(DISPLAY 5 GANG)	
	NACH FLB.4644 710 368/371/372/374/375/376/844/845/846	
	STEUERUNG 6009 047 545(DISPLAY 4 GANG)	
	STEUERUNG 6009 047 769(DISPLAY 5 GANG)	
	NACH FLB.4644 710 369/370/373	
	*	

© All rights reserved by ZF Friedrichshafen AG 2011, even in the event of applications for copyright. We hold all rights of disposal, such as the right to copy and disseminate. All rights reserved.

Assembly group overview

Graphics	Pos.	Material number	Name	Quantity	Amend. no.	Techn. Info.
464413005800	270	4644.130.193	ENGINE CONNECTION	1		
416603007300	500	4166.030.073	CONVERTER	1		
464410200100	30	4644.102.098	INPUT	1		
464410111400	10	4644.101.160	GEARBOX HOUSING	1		
464410111500	20	4644.101.462	GEARBOX HOUSING	1		
464410810300	150	4644.108.218	LAYSHAFT	1		
464410810400	160	4644.108.403	LAYSHAFT	1		
464415110800	350	4644.151.227	COUPLING	1		
464415110900	355	4644.151.439	COUPLING	1		
464415210800	360	4644.152.125	COUPLING	1		
464415210900	365	4644.152.532	COUPLING	1		
464415313100	370	4644.153.123	COUPLING	1		
464415311100	375	4644.153.414	COUPLING	1		
464415400100	380	4644.154.018	POWER TAKE-OFF	1		
464410630000	110	4644.106.300	GEAR SHIFT SYSTEM	1		
464415930040	120	4644.159.300	GEAR SHIFT SYSTEM	1		
464412020100	190	4644.120.201	PRESSURE REGULATOR	1		
464413800100	330	4644.138.001	FILTER	1		
464412510600	250	4644.125.007	INDTRANSMITTER	2		
464410700100	130	4644.107.401	SPEEDO	1		
464413111100	290	4644.131.004	FILLER NECK	1		
464413140100	300	4644.131.401	FILLER NECK	1		
464412110700	210	4644.121.101	OIL PIPE	1		
464219911500	490	4642.199.265	LOOSE PARTS	1		
464418302400	495	4644.183.044	LOOSE PARTS	1		

© All rights reserved by ZF Friedrichshafen AG 2011, even in the event of applications for copyright. We hold all rights of disposal, such as the right to copy and disseminate. All rights reserved.

Material number: 4644.034.002 **4 WG 201(5) /**
Plant: 464413005800 **ENGINE CONNECTION**
Material-assembly-group-no: 4644.130.193

There is presently no plate available for this parts list/ assembly.

© All rights reserved by ZF Friedrichshafen AG 2011, even in the event of applications for copyright. We hold all rights of disposal, such as the right to copy and disseminate. All rights reserved.
For information only, not subject to the amendment service.

Parts list

Material number: 4644.034.002 **4 WG 201(5) /**
Plant: 464413005800
Material-assembly-group-no: 4644.130.193

Pos.	Material number	Customer material	Name	Quantity	ME	Amend. no.	Techn. Info.	Weight	Rep kit	Alternative material
10	4644.330.246		CONNHOUSING	1				16		
30	0636.015.243	1000000357	HEXAGON BOLT	14			M10X35	30		
40	0631.329.163	1000000246	SLOTPIN	2			10X28	10		
44	0631.329.069	7307328A	SLOTPIN	2			6X30	4		
70	4644.230.034		DIAPHRAGM	2		K02556/9410		260		
80	0636.015.147	ZM 8095905	HEXAGON BOLT	4			M10X18	0,020		
94	0630.001.014	1000000174	WASHER	4				2		
260	4166.330.123	1000001942	WASHER	1				0,038		
270	0634.313.260	1000000298	O-RING	1			25X3	0,002		
280	0630.502.015	1000000213	RETAINING RING	1			30X1,2	1,600		
300	0636.604.078		STUD	2			M10X50	0,040		
308	0636.604.075		STUD	1			M10X35	0,024		
310	0637.006.102	0093400697	HEXAGON NUT	3			M10	10,300		

© All rights reserved by ZF Friedrichshafen AG 2011, even in the event of applications for copyright. We hold all rights of disposal, such as the right to copy and disseminate. All rights reserved.

Material number: 4644.034.002 **4 WG 201(5) /**
Plant: 416603007300 **CONVERTER**
Material-assembly-group-no: 4166.030.073

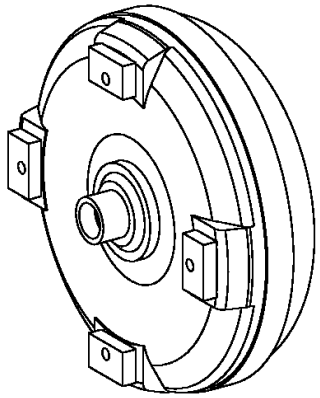

010

© All rights reserved by ZF Friedrichshafen AG 2011, even in the event of applications for copyright. We hold all rights of disposal, such as the right to copy and disseminate. All rights reserved. **22.12.2011**
For information only, not subject to the amendment service. **10**

Parts list

Material number: 4644.034.002 **4 WG 201(5) /**
Plant: 416603007300
Material-assembly-group-no: 4166.030.073

Pos.	Material number	Customer material	Name	Quantity	ME	Amend. no.	Techn. Info.	Weight	Rep kit	Alternative material
10	4168.030.102	026.90209	CONVERTER	1				16,910		

© All rights reserved by ZF Friedrichshafen AG 2011, even in the event of applications for copyright. We hold all rights of disposal, such as the right to copy and disseminate. All rights reserved.

Plant

Material number: 4644.034.002 **4 WG 201(5) /**
Plant: 464410200100 **INPUT**
Material-assembly-group-no: 4644.102.098

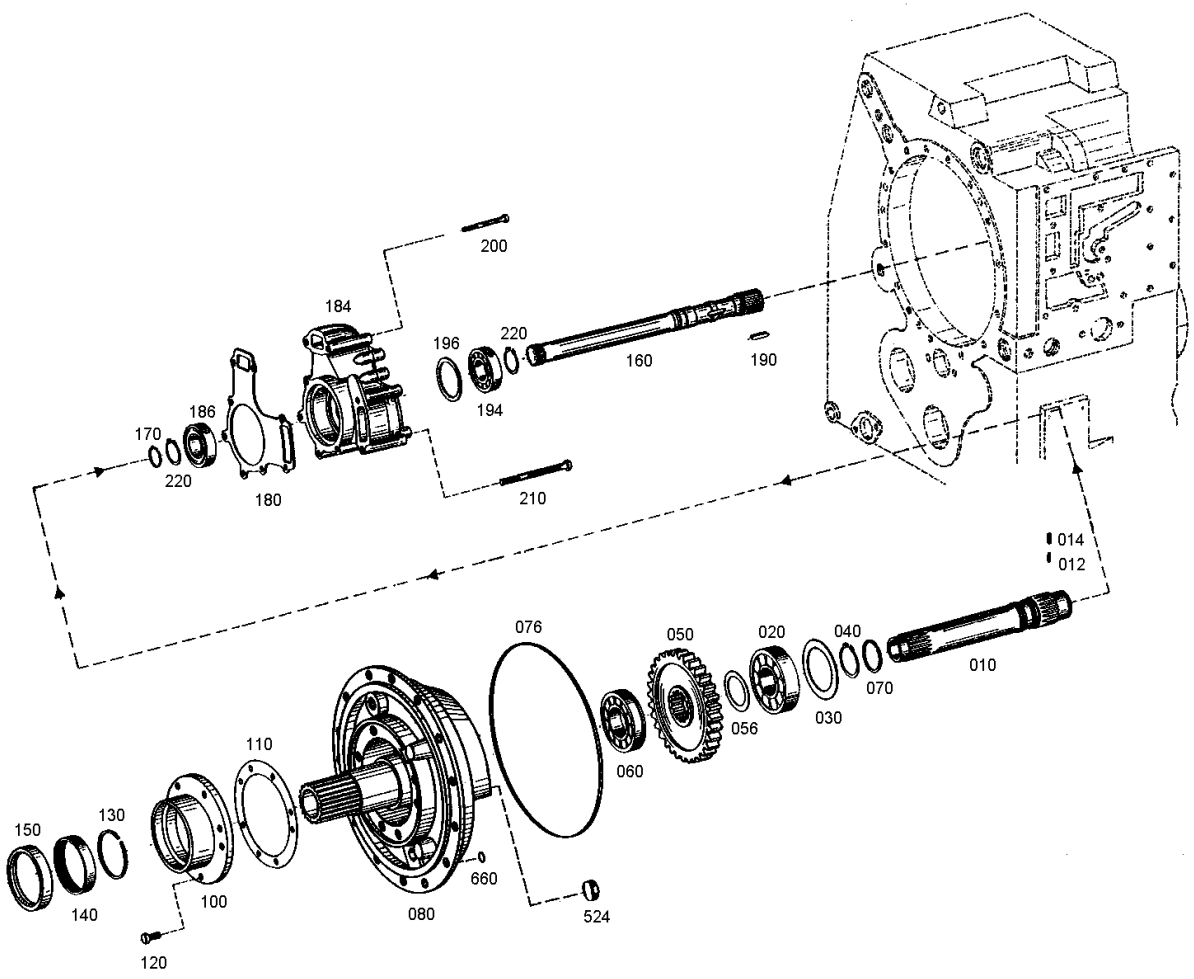

© All rights reserved by ZF Friedrichshafen AG 2011, even in the event of applications for copyright. We hold all rights of disposal, such as the right to copy and disseminate. All rights reserved. **22.12.2011**
For information only, not subject to the amendment service. **12**

Parts list

Material number: 4644.034.002 **4 WG 201(5) /**
Plant: 464410200100
Material-assembly-group-no: 4644.102.098

Pos.	Material number	Customer material	Name	Quantity	ME	Amend. no.	Techn. Info.	Weight	Rep kit	Alternative material
10	4644.302.229		INPUT SHAFT	1				1,300		
12	0631.329.267	1000000247	SLOTPIN	1			2,5X5	1		
14	0631.329.124	1000000245	SLOTPIN	1			1,5X5	0,001		
20	0750.116.139	00640763	BALL BEARING	1			40,000X90,000X23,000	0,630		
30	---		SHIM	1				0,000		
---	4607.302.033	1000002064	SHIM	1				5		
---	4607.302.034	1000002065	SHIM	1				9		
---	4607.302.014	1000002063	SHIM	1				11		
---	4607.302.013	1000002062	SHIM	1				13		
---	4607.302.012	1000002061	SHIM	1				14		
---	4607.302.011	1000002060	SHIM	1				16		
---	4607.302.010	1000002059	SHIM	1				18		
---	4607.302.009	1000002058	SHIM	1				19		
---	4607.302.008	1000002057	SHIM	1				21		
---	4607.302.007	1000002056	SHIM	1				23		
---	4607.302.006	1000002055	SHIM	1				25		
40	0630.501.031	1000000207	RETAINING RING	1			40X1,75	4		
50	4644.302.249		INPUT GEAR	1		K01731/9410		2,550		
56	4644.302.170	3150393600	WASHER	1				75		
60	0750.118.200	00640764	CYROLLBEARING	1			45,0X85,0X19,0	445		
70	0734.317.252	00560856	PISTON RING	1		K00708/9410		0,004		
76	0634.313.521		O-RING	1			290X3	0,012		
80	4644.302.150		OIL FEEDFLANGE	1				14,400		
100	4642.301.136	1000002076	BEARING COVER	1				2,300		
110	4644.301.262	50359069	GASKET	1				3		
120	0636.015.092	1000000351	HEXAGON BOLT	8			M8X28	15		
130	0734.401.078	00560832	PISTON RING	1				10		
140	0735.298.027	00594536	NEEDLE SLEEVE	1			75,0X83,0X16,0	0,083		
150	0750.111.231	00560830	SHAFT SEAL	1			75X100X10	54,900		
160	4644.302.225		INPUT SHAFT	1				2,100		
170	0634.402.025	00560876	R-RING	1			30X2	2		

© All rights reserved by ZF Friedrichshafen AG 2011, even in the event of applications for copyright. We hold all rights of disposal, such as the right to copy and disseminate. All rights reserved. **22.12.2011**
For information only, not subject to the amendment service. **13**

Material number: 4644.034.002 **4 WG 201(5) /**
Plant: 464410200100
Material-assembly-group-no: 4644.102.098

Pos.	Material number	Customer material	Name	Quantity	ME	Amend. no.	Techn. Info.	Weight	Rep kit	Alternative material
180	4644.301.265	00560814	GASKET	1				4,600		
184	0750.132.143	ZM 2291227	GEAR PUMP	1				9		
186	0750.116.104	00640765	BALL BEARING	1			30X62X16	193		
190	0631.501.514	ZM 2290131	FITTING KEY	1			6X6X28	10		
194	0750.116.104	00640765	BALL BEARING	1			30X62X16	193		
196	---		WASHER	1				0,000		
---	0730.001.591	SA 8320-04600	WASHER	1			A=1,00	5		
---	0730.001.592	00655259	WASHER	1			A=0,90	5		
---	0730.001.593	SA 8320-04620	SHIM	1			S=0,8	5		
---	0730.001.594	SA 8320-04630	SHIM	1			S=0,7	5		
---	0730.001.595	SA 8320-04640	SHIM	1			S=0,6	5		
---	0730.001.596	E136107	SHIM	1				5		
---	0730.001.597	SA 8320-04660	SHIM	1			S=0,4	5		
---	0730.001.598	SA 8320-04670	SHIM	1			S=0,3	5		
---	0730.001.599	E136110	SHIM	1			S=0,2	5		
---	0730.001.600	SA 8320-04690	SHIM	1			S=0,1	5		
200	0636.010.111	1000000333	HEXAGON BOLT	4			M8X85	0,030		
210	0636.010.123	A6360101023	HEXAGON BOLT	4			M8X115	0,046		
220	0630.501.024	1000000205	RETAINING RING	2			30X1,5	3		
524	0630.361.033	SA 8320-01680	SEALING CAP	2				3,900		
660	0634.306.175	00560862	O-RING	3			9X1,5	0,010		

© All rights reserved by ZF Friedrichshafen AG 2011, even in the event of applications for copyright. We hold all rights of disposal, such as the right to copy and disseminate. All rights reserved. **22.12.2011**
For information only, not subject to the amendment service. **14**

Plant

Material number: 4644.034.002 **4 WG 201(5) /**
Plant: 464410111400 **GEARBOX HOUSING**
Material-assembly-group-no: 4644.101.160

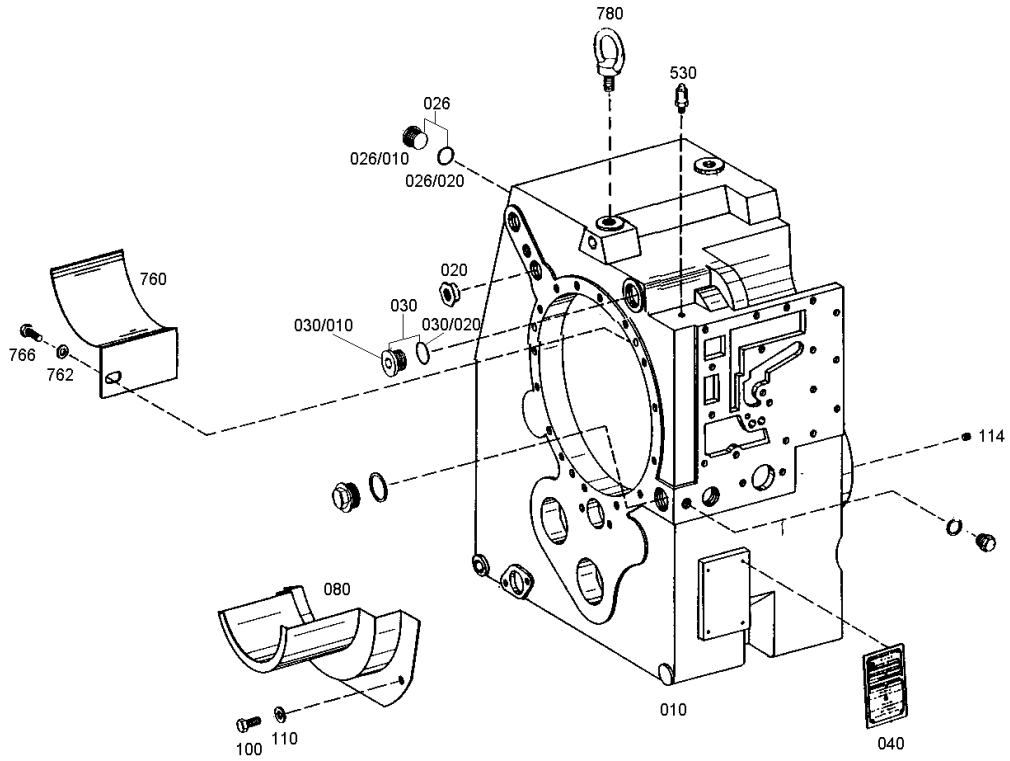

© All rights reserved by ZF Friedrichshafen AG 2011, even in the event of applications for copyright. We hold all rights of disposal, such as the right to copy and disseminate. All rights reserved. **22.12.2011**
For information only, not subject to the amendment service. **15**

Parts list

Material number: 4644.034.002 **4 WG 201(5) /**
Plant: 464410111400
Material-assembly-group-no: 4644.101.160

Pos.	Material number	Customer material	Name	Quantity	ME	Amend. no.	Techn. Info.	Weight	Rep kit	Alternative material
10	4644.301.323		GEARBOX HOUSING	1				80		
20	4644.301.189	8900125354	THREADED BUSH	1				45		
26	---		SCREW PLUG	1				35		
/20	0634.306.198	1000000283	O-RING	1			17X2	0,240		
30	---		SCREW PLUG	1				90		
/20	0634.304.275	104006695	O-RING	1			27X2	0,004		
40	0730.365.067	1000000877	TYPE PLATE	1				0,020		
80	4644.301.161		COVER PLATE	1				690		
100	0636.015.060	0093301297	HEXAGON BOLT	2			M8X12	10		
110	0630.001.012	1000000173	WASHER	2				1,500		
114	0631.610.020	1000000250	SET SCREW	2			M8X8	1		
530	0501.218.540		BREATHER	1				0,000		
760	4644.301.352		SCREEN SHEET	1				0,108		
762	0630.001.012	1000000173	WASHER	1				1,500		
766	0636.015.060	0093301297	HEXAGON BOLT	1			M8X12	10		
780	0636.804.003	1000000411	LIFTEYE BOLT	2			M20	411		

© All rights reserved by ZF Friedrichshafen AG 2011, even in the event of applications for copyright. We hold all rights of disposal, such as the right to copy and disseminate. All rights reserved. **22.12.2011**
For information only, not subject to the amendment service.

Plant

Material number: 4644.034.002 **4 WG 201(5) /**
Plant: 464410111500 **GEARBOX HOUSING**
Material-assembly-group-no: 4644.101.462

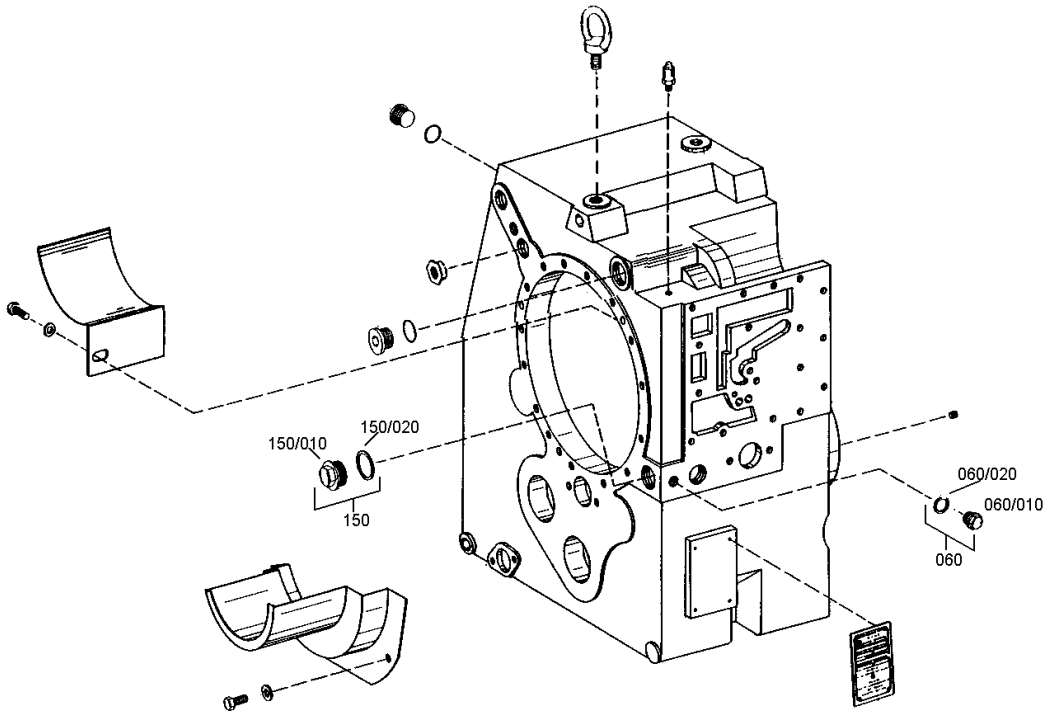

© All rights reserved by ZF Friedrichshafen AG 2011, even in the event of applications for copyright. We hold all rights of disposal, such as the right to copy and disseminate. All rights reserved.
For information only, not subject to the amendment service.

Parts list

Material number: 4644.034.002 **4 WG 201(5) /**
Plant: 464410111500
Material-assembly-group-no: 4644.101.462

Pos.	Material number	Customer material	Name	Quantity	ME	Amend. no.	Techn. Info.	Weight	Rep kit	Alternative material
60	---		SCREW PLUG	1				25		
/10	0636.305.046	SA 8320-03970	SCREW PLUG	1			M14X1,5	0,024		
/20	0634.306.522	104006806	O-RING	1			11X2	0,100		
150	---		SCREW PLUG	1			AM26X1,5 KPL.MIT O-RING	60		
/10	0636.305.019	1000000404	SCREW PLUG	1			M26X1,5	60		
/20	0634.303.233	14001055	O-RING	1			23X2	1		

© All rights reserved by ZF Friedrichshafen AG 2011, even in the event of applications for copyright. We hold all rights of disposal, such as the right to copy and disseminate. All rights reserved.

Material number: 4644.034.002 **4 WG 201(5) /**
Plant: 464410810300 **LAYSHAFT**
Material-assembly-group-no: 4644.108.218

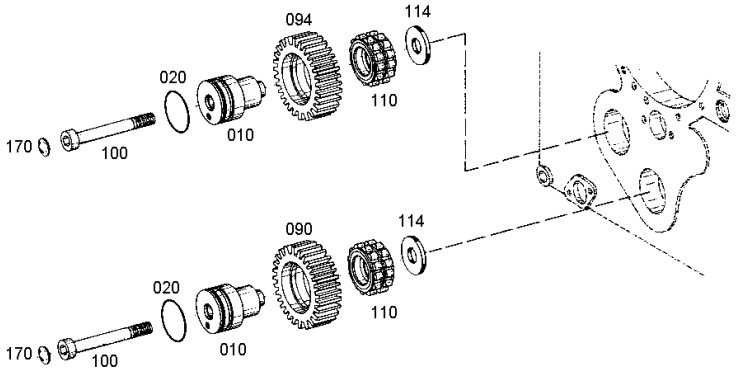

© All rights reserved by ZF Friedrichshafen AG 2011, even in the event of applications for copyright. We hold all rights of disposal, such as the right to copy and disseminate. All rights reserved. **22.12.2011**
For information only, not subject to the amendment service. **19**

Parts list

Material number: 4644.034.002 **4 WG 201(5) /**
Plant: 464410810300
Material-assembly-group-no: 4644.108.218

Pos.	Material number	Customer material	Name	Quantity	ME	Amend. no.	Techn. Info.	Weight	Rep kit	Alternative material
10	4644.308.556		AXLE	2				1,260		
20	0634.313.529	1000000300	O-RING	2			57X3	2		
90	4644.308.583		IDLER GEAR	1				1,360		
94	4644.308.582		IDLER GEAR	1				1,950		
100	0636.104.146	1000000391	CAP SCREW	2			M12X100	90		
110	0750.118.216	1000000995	CYROLLBEARING	2			45,0X76,5X38,0	615		
114	4644.330.229	1000002224	SHIM	2				61,200		
170	0630.362.024	1000000203	SEALING DISC	2				8		

© All rights reserved by ZF Friedrichshafen AG 2011, even in the event of applications for copyright. We hold all rights of disposal, such as the right to copy and disseminate. All rights reserved.

Plant

Material number: 4644.034.002 **4 WG 201(5) /**
Plant: 464410810400 **LAYSHAFT**
Material-assembly-group-no: 4644.108.403

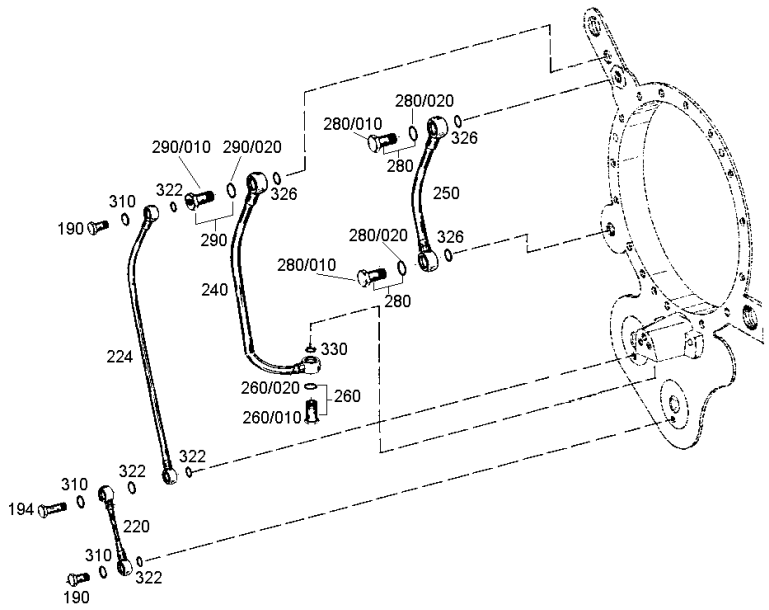

© All rights reserved by ZF Friedrichshafen AG 2011, even in the event of applications for copyright. We hold all rights of disposal, such as the right to copy and disseminate. All rights reserved. **22.12.2011**
For information only, not subject to the amendment service. **21**

Parts list

Material number: 4644.034.002 **4 WG 201(5) /**
Plant: 464410810400
Material-assembly-group-no: 4644.108.403

Pos.	Material number	Customer material	Name	Quantity	ME	Amend. no.	Techn. Info.	Weight	Rep kit	Alternative material
190	0737.835.162		UNION SCREW	2				15		
194	0737.835.177		UNION SCREW	1				1,700		
220	0750.147.191		HOSE PIPE	1				0,076		
224	0750.147.192		HOSE PIPE	1				130		
240	0750.147.193		HOSE PIPE	1				195		
250	0750.147.194		HOSE PIPE	1				150		
260	---		UNION SCREW	1				25		
/20	0634.306.522	104006806	O-RING	1			11X2	0,100		
280	---		UNION SCREW	2		K00328/0310		35		
/20	0634.306.523	1000000291	O-RING	1			13X2	0,200		
290	---		UNION SCREW	1				35		
/10	0737.835.160		UNION SCREW	1				0,038		
/20	0634.306.523	1000000291	O-RING	1			13X2	0,200		
310	0634.313.322	SKIBBE	O-RING	3			8X1,5	0,002		
322	0634.313.514	3211001408	O-RING	4			12X2,5	0,005		
326	0634.306.202	1000000284	O-RING	3			18X2,5	1		
330	0634.306.193	023213R1	O-RING	1			16X2,5	0,040		

© All rights reserved by ZF Friedrichshafen AG 2011, even in the event of applications for copyright. We hold all rights of disposal, such as the right to copy and disseminate. All rights reserved. **22.12.2011**
For information only, not subject to the amendment service. **22**

Material number: 4644.034.002 **4 WG 201(5) /**
Plant: 464415110800 **COUPLING**
Material-assembly-group-no: 4644.151.227

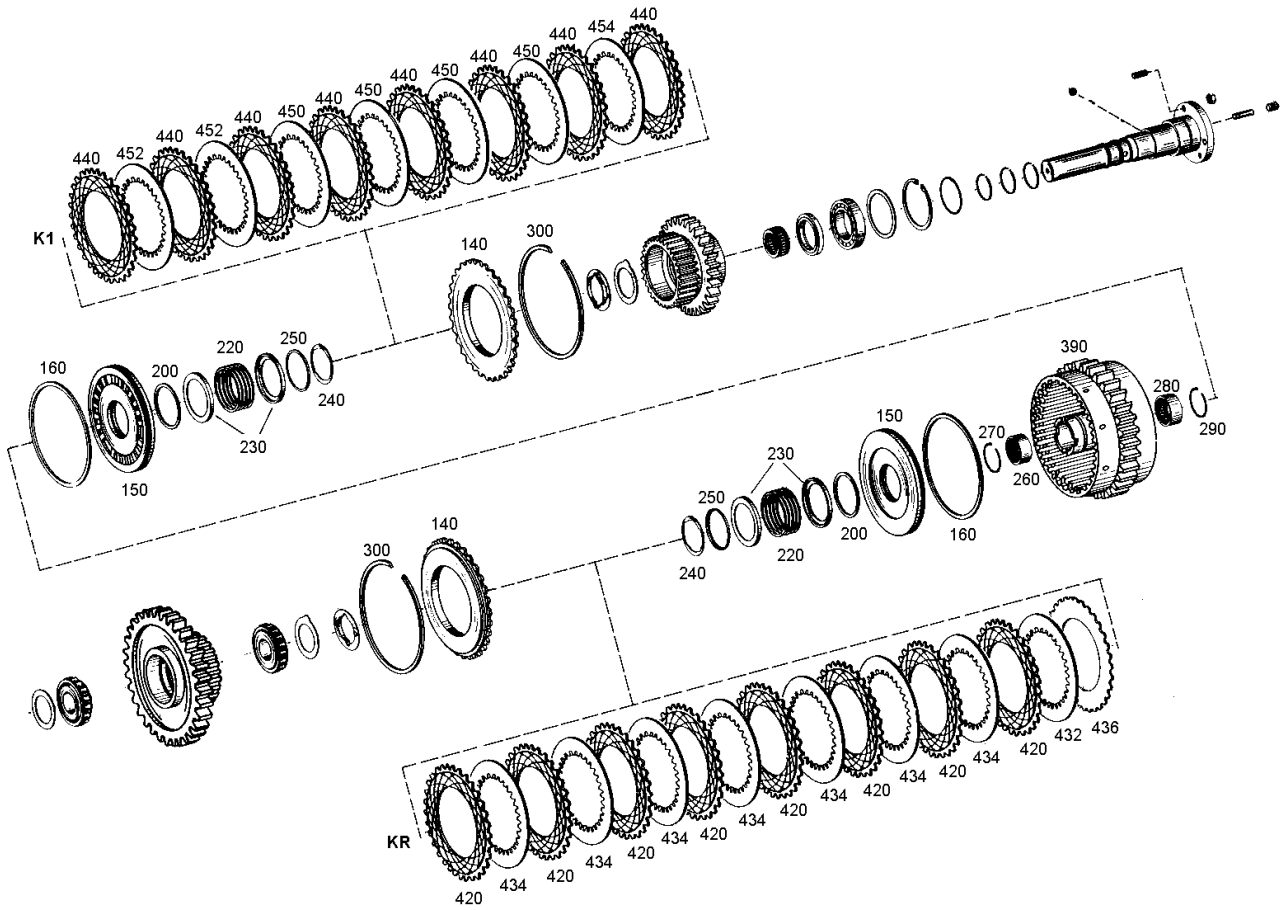

© All rights reserved by ZF Friedrichshafen AG 2011, even in the event of applications for copyright. We hold all rights of disposal, such as the right to copy and disseminate. All rights reserved. **22.12.2011**
For information only, not subject to the amendment service. **23**

Parts list

Material number: 4644.034.002 **4 WG 201(5) /**
Plant: 464415110800
Material-assembly-group-no: 4644.151.227

Pos.	Material number	Customer material	Name	Quantity	ME	Amend. no.	Techn. Info.	Weight	Rep kit	Alternative material
140	4644.308.071	1000002197	END SHIM	2				1,050		
150	4644.351.070	1000002226	PISTON	2				520		
160	0750.112.139	00560804	PROFILE SEALING RING	2			150X161,4X2,5	0,010		
200	0750.112.140	00560806	PROFILE SEALING RING	2			60X71,4X2,5	4		
220	0732.041.183	1000000890	COMPRSPRING	2				157		
230	4642.308.083	1000002083	GUIDE RING	4				10		
240	0630.531.346	00560874	V-RING	2				12		
250	4642.308.084	1000002084	GUIDE RING	2				4,500		
260	0635.303.203	00560868	NEEDLE SLEEVE	1			35X42X26	66		
270	0730.513.610	3150368000	SNAP RING	1				5		
280	0635.303.205	00640753	NEEDLE SLEEVE	1			40X47X26	0,075		
290	0730.513.611	3150368100	SNAP RING	1				5		
300	---		SNAP RING	2				0,000		
---	0730.513.181	1000000884	SNAP RING	2				40		
---	0730.513.437		SNAP RING	2				0,041		
---	0730.513.436	1.115-00315	SNAP RING	2				40		
---	0730.513.435		SNAP RING	2				40		
---	0730.513.434	1.115-00314	SNAP RING	2				0,006		
---	0730.513.433		SNAP RING	2				40		
---	0730.513.459	1.115-00313	SNAP RING	2				35,900		
---	0730.513.458		SNAP RING	2				35		
---	0730.513.457	1.115-00312	SNAP RING	2				35		
390	4644.251.043	VOE14505520	DISC CARRIER	1			VERSION II	7,400		
420	0501.309.330	ZM 2282684	OCLUTCH DISC	8				180		
432	4644.308.365	187236A1	ICLUTCH DISC	1				330		
434	4644.308.330	1000002201	ICLUTCH DISC	7				0,180		
436	---		OCLUTCH DISC	1				0,000		
---	4644.308.014	1000002196	OCLUTCH DISC	1				222		
---	4644.308.115	1000002198	OCLUTCH DISC	1				167		
440	0501.309.330	ZM 2282684	OCLUTCH DISC	8				180		
450	4644.308.329	1000002200	ICLUTCH DISC	4				215		

© All rights reserved by ZF Friedrichshafen AG 2011, even in the event of applications for copyright. We hold all rights of disposal, such as the right to copy and disseminate. All rights reserved. **22.12.2011**
For information only, not subject to the amendment service. **24**

Material number: 4644.034.002 **4 WG 201(5) /**
Plant: 464415110800
Material-assembly-group-no: 4644.151.227

Pos.	Material number	Customer material	Name	Quantity	ME	Amend. no.	Techn. Info.	Weight	Rep kit	Alternative material
452	4644.308.330	1000002201	ICLUTCH DISC	2				0,180		
454	---		ICLUTCH DISC	1				0,000		
---	4644.308.329	1000002200	ICLUTCH DISC	1				215		
---	4644.308.330	1000002201	ICLUTCH DISC	1				0,180		

© All rights reserved by ZF Friedrichshafen AG 2011, even in the event of applications for copyright. We hold all rights of disposal, such as the right to copy and disseminate. All rights reserved.

Material number: 4644.034.002 **4 WG 201(5) /**
Plant: 464415110900 **COUPLING**
Material-assembly-group-no: 4644.151.439

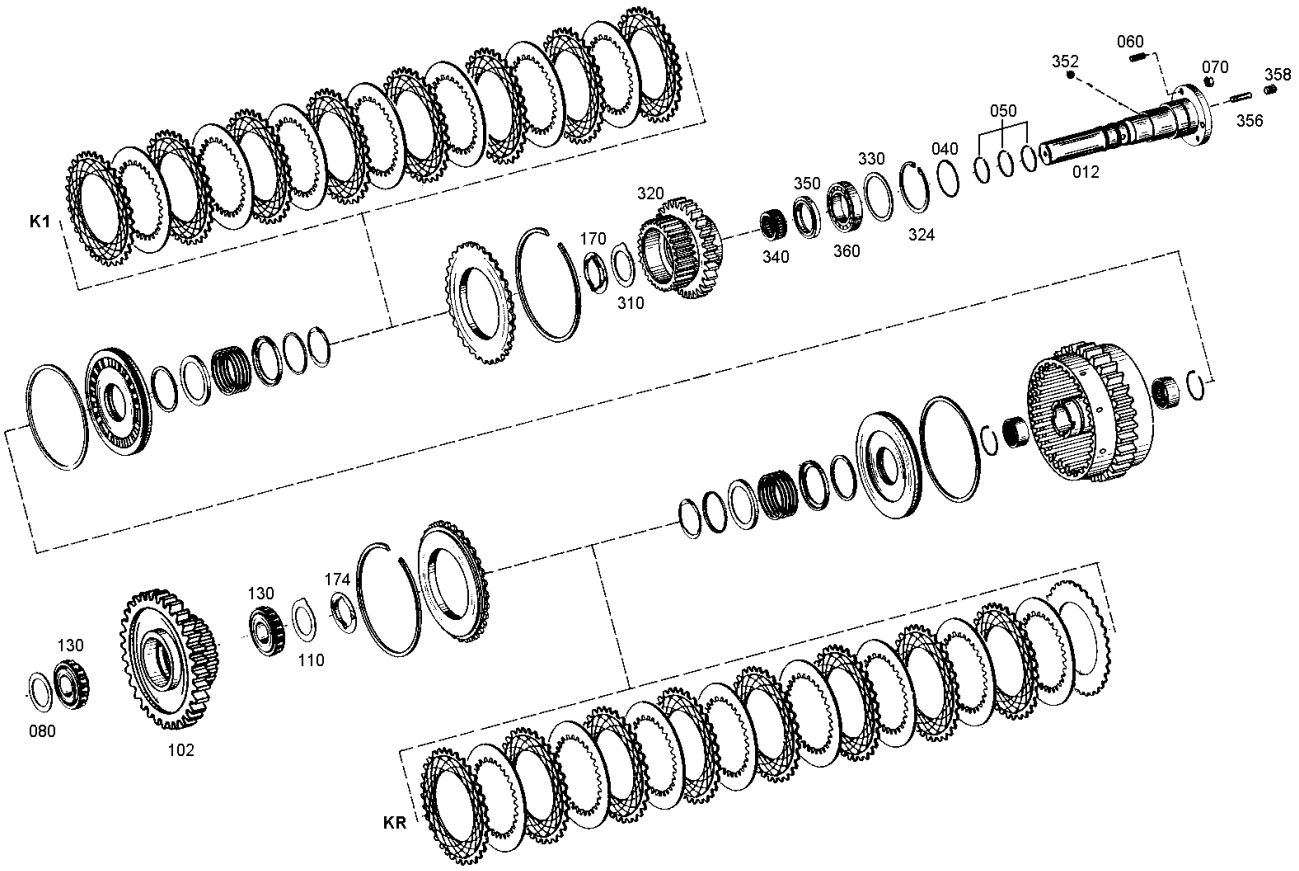

© All rights reserved by ZF Friedrichshafen AG 2011, even in the event of applications for copyright. We hold all rights of disposal, such as the right to copy and disseminate. All rights reserved. **22.12.2011**
For information only, not subject to the amendment service. **26**

Parts list

Material number: 4644.034.002 **4 WG 201(5) /**
Plant: 464415110900
Material-assembly-group-no: 4644.151.439

Pos.	Material number	Customer material	Name	Quantity	ME	Amend. no.	Techn. Info.	Weight	Rep kit	Alternative material
12	4644.351.049	75285964	AXLE	1				3		
40	0634.313.536	00640755	O-RING	1			49X3	1		
50	0734.401.106	00560834	PISTON RING	3				2		
60	0636.610.014	1000000410	STUD	3			M8X18	0,009		
70	0637.006.018	1000000412	HEXAGON NUT	3			M8	4,700		
80	---		SHIM	1				0,000		
---	0730.108.157	3150246500	SHIM	1			70X35,1X1,4	35		
---	0730.108.158	3150249200	SHIM	1			70X35,1X1,6	40		
---	0730.108.159	3150249300	SHIM	1			70X35,1X1,8	0,040		
---	0730.108.160	3150249400	SHIM	1		K02057/9410	70X35,1X2	45		
---	0730.108.161	3150249500	SHIM	1		K02057/9410	70X35,1X2,2	50		
---	0730.108.162	199086A1	SHIM	1		K02057/9410	S=2,4	55		
---	0730.108.163	3150249700	SHIM	1		K02057/9410	70X35,1X2,6	55		
---	0730.108.164	3150249800	SHIM	1		K02057/9410		60		
102	4644.351.091		SPUR GEAR	1		K02483/9510	Z=54	5,400		
110	0730.150.777	00655266	THRUST WASHER	1				6		
130	0750.118.111	00640756	CYROLLBEARING	1			35,0X81,5X40,8	1		
170	4644.351.094	3150367800	THRUST PLATE	1		K00427/9610		35		
174	4642.308.555	ZM 2905088	THRUST PLATE	1		K00597/9610		45		
310	0730.150.779	00655267	THRUST WASHER	1				6		
320	4644.351.006	MX252380	SPUR GEAR	1				3,200		
324	0630.502.037	1000000215	RETAINING RING	1			75X2,5	20		
330	---		SHIM RING	1				0,000		
---	0630.004.233	1000000189	SHIM RING	1			60X75X1,6	20		
---	0630.004.232	1.114-00221	SHIM RING	1			60X75X1,5	17		
---	0630.004.246	1.114-00220	SHIM RING	1			60X75X1,2	20		
---	0630.000.054	1000000166	SHIM RING	1			60X75X1	12		
---	0630.004.364	1000000198	SHIM RING	1			60X75X0,9	11		
---	0630.000.055	1000000167	SHIM RING	1			60X75X0,5	6		
---	0630.004.168	1000000187	SHIM RING	1			60X75X0,3	0,003		
340	0750.115.109	1000000954	NEEDLE CAGE	1			45,0X53,0X28,0	0,080		

© All rights reserved by ZF Friedrichshafen AG 2011, even in the event of applications for copyright. We hold all rights of disposal, such as the right to copy and disseminate. All rights reserved. **22.12.2011**
For information only, not subject to the amendment service. **27**

Material number: 4644.034.002 **4 WG 201(5) /**
Plant: 464415110900
Material-assembly-group-no: 4644.151.439

Pos.	Material number	Customer material	Name	Quantity	ME	Amend. no.	Techn. Info.	Weight	Rep kit	Alternative material
350	4644.351.029	1000002227	BUSH	1				0,073		
352	0635.460.021	1000000324	BALL	2			10	0,010		
356	4642.351.015	1000002093	CYLROLLER	2			10,0X30,0	25		
358	0631.612.025	1000000252	SET SCREW	2			M12X20	10		
360	0750.116.100	00640757	BALL BEARING	1			45,0X75,0X16,0	289		

© All rights reserved by ZF Friedrichshafen AG 2011, even in the event of applications for copyright. We hold all rights of disposal, such as the right to copy and disseminate. All rights reserved.

Material number: 4644.034.002 **4 WG 201(5) /**
Plant: 464415210800 **COUPLING**
Material-assembly-group-no: 4644.152.125

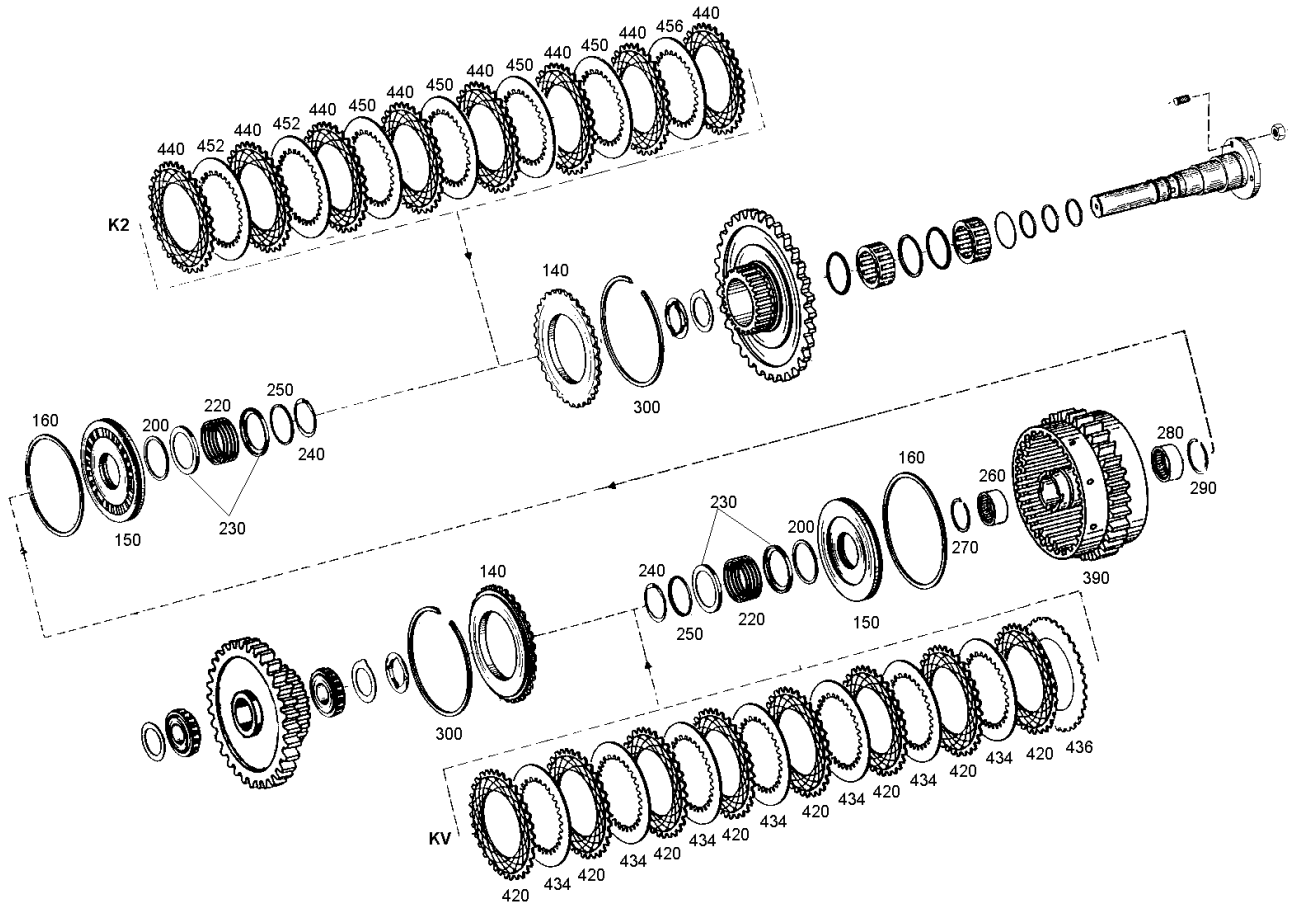

© All rights reserved by ZF Friedrichshafen AG 2011, even in the event of applications for copyright. We hold all rights of disposal, such as the right to copy and disseminate. All rights reserved. **22.12.2011**
For information only, not subject to the amendment service. **29**

Parts list

Material number: 4644.034.002 **4 WG 201(5) /**
Plant: 464415210800
Material-assembly-group-no: 4644.152.125

Pos.	Material number	Customer material	Name	Quantity	ME	Amend. no.	Techn. Info.	Weight	Rep kit	Alternative material
140	4644.308.071	1000002197	END SHIM	2				1,050		
150	4644.351.070	1000002226	PISTON	2				520		
160	0750.112.139	00560804	PROFILE SEALING RING	2			150X161,4X2,5	0,010		
200	0750.112.140	00560806	PROFILE SEALING RING	2			60X71,4X2,5	4		
220	0732.041.183	1000000890	COMPRSPRING	2				157		
230	4642.308.083	1000002083	GUIDE RING	4				10		
240	0630.531.346	00560874	V-RING	2				12		
250	4642.308.084	1000002084	GUIDE RING	2				4,500		
260	0635.303.203	00560868	NEEDLE SLEEVE	1			35X42X26	66		
270	0730.513.610	3150368000	SNAP RING	1		K00410/95410		5		
280	0635.303.205	00640753	NEEDLE SLEEVE	1			40X47X26	0,075		
290	0730.513.611	3150368100	SNAP RING	1		K00410/95410		5		
300	---		SNAP RING	2				0,000		
---	0730.513.181	1000000884	SNAP RING	2				40		
---	0730.513.437		SNAP RING	2				0,041		
---	0730.513.436	1.115-00315	SNAP RING	2				40		
---	0730.513.435		SNAP RING	2				40		
---	0730.513.434	1.115-00314	SNAP RING	2				0,006		
---	0730.513.433		SNAP RING	2				40		
---	0730.513.459	1.115-00313	SNAP RING	2				35,900		
---	0730.513.458		SNAP RING	2				35		
---	0730.513.457	1.115-00312	SNAP RING	2				35		
390	4644.252.088	3150350700	DISC CARRIER	1		K00410/95410	VERSION II	8,800		
420	0501.309.330	ZM 2282684	OCLUTCH DISC	8				180		
434	4644.308.330	1000002201	ICLUTCH DISC	7				0,180		
436	---		OCLUTCH DISC	1				0,000		
---	4644.308.014	1000002196	OCLUTCH DISC	1				222		
---	4644.308.115	1000002198	OCLUTCH DISC	1				167		
440	0501.309.330	ZM 2282684	OCLUTCH DISC	8				180		
450	4644.308.329	1000002200	ICLUTCH DISC	4				215		
452	4644.308.330	1000002201	ICLUTCH DISC	2				0,180		

© All rights reserved by ZF Friedrichshafen AG 2011, even in the event of applications for copyright. We hold all rights of disposal, such as the right to copy and disseminate. All rights reserved. **22.12.2011**
For information only, not subject to the amendment service.

Material number: 4644.034.002 **4 WG 201(5) /**
Plant: 464415210800
Material-assembly-group-no: 4644.152.125

Pos.	Material number	Customer material	Name	Quantity	ME	Amend. no.	Techn. Info.	Weight	Rep kit	Alternative material
456	---		ICLUTCH DISC	1				0,000		
---	4644.308.329	1000002200	ICLUTCH DISC	1				215		
---	4644.308.330	1000002201	ICLUTCH DISC	1				0,180		

© All rights reserved by ZF Friedrichshafen AG 2011, even in the event of applications for copyright. We hold all rights of disposal, such as the right to copy and disseminate. All rights reserved. **22.12.2011**
For information only, not subject to the amendment service. **31**

Material number: 4644.034.002 **4 WG 201(5) /**
Plant: 464415210900 **COUPLING**
Material-assembly-group-no: 4644.152.532

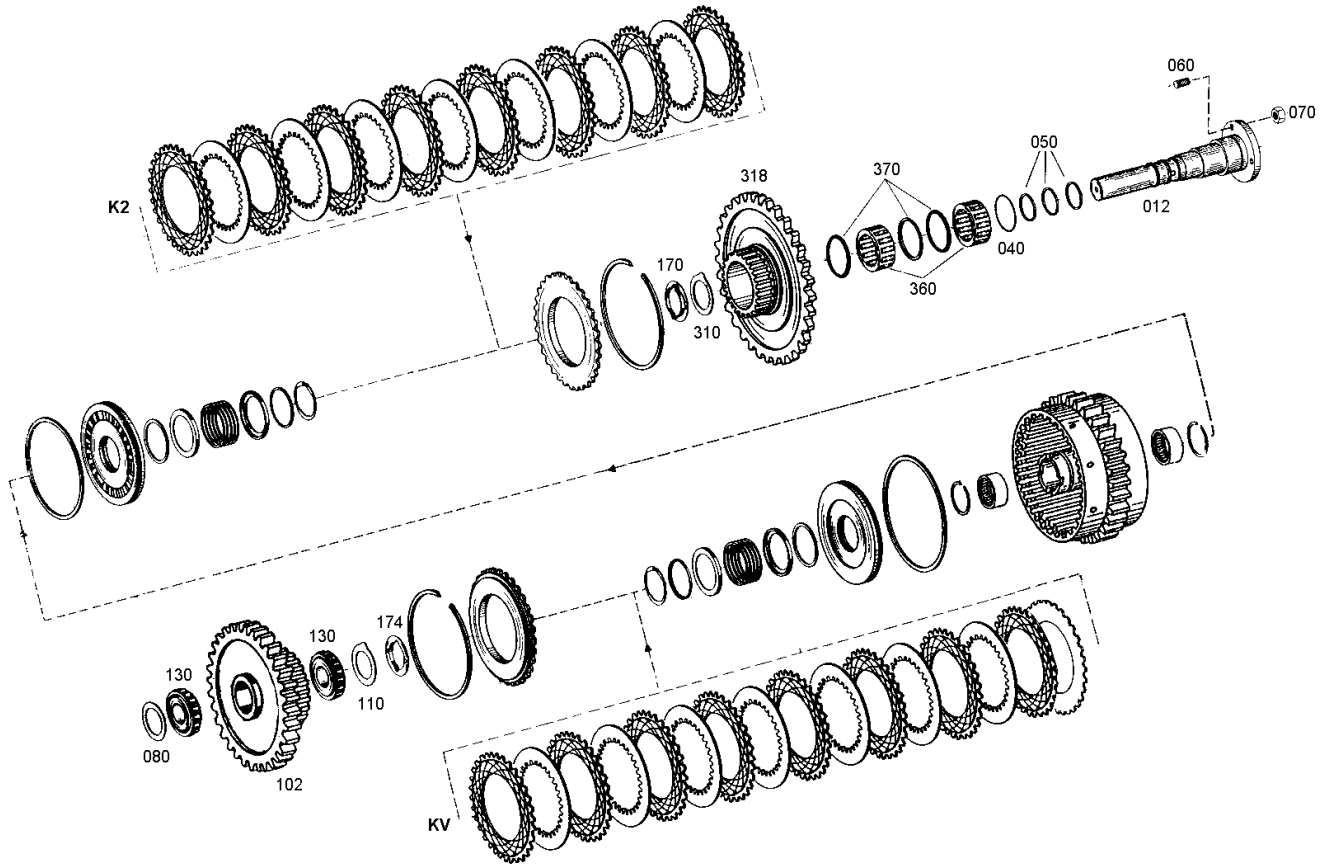

© All rights reserved by ZF Friedrichshafen AG 2011, even in the event of applications for copyright. We hold all rights of disposal, such as the right to copy and disseminate. All rights reserved. **22.12.2011**
For information only, not subject to the amendment service. **32**

Parts list

Material number: 4644.034.002 **4 WG 201(5) /**
Plant: 464415210900
Material-assembly-group-no: 4644.152.532

Pos.	Material number	Customer material	Name	Quantity	ME	Amend. no.	Techn. Info.	Weight	Rep kit	Alternative material
12	4644.352.087		AXLE	1				3		
40	0634.313.536	00640755	O-RING	1			49X3	1		
50	0734.401.106	00560834	PISTON RING	3				2		
60	0636.610.014	1000000410	STUD	2			M8X18	0,009		
70	0637.006.018	1000000412	HEXAGON NUT	3			M8	4,700		
80	---		SHIM	1				0,000		
---	0730.108.157	3150246500	SHIM	1			70X35,1X1,4	35		
---	0730.108.158	3150249200	SHIM	1			70X35,1X1,6	40		
---	0730.108.159	3150249300	SHIM	1			70X35,1X1,8	0,040		
---	0730.108.160	3150249400	SHIM	1		K02057/9410	70X35,1X2	45		
---	0730.108.161	3150249500	SHIM	1		K02057/9410	70X35,1X2,2	50		
---	0730.108.162	199086A1	SHIM	1		K02057/9410	S=2,4	55		
---	0730.108.163	3150249700	SHIM	1		K02057/9410	70X35,1X2,6	55		
---	0730.108.164	3150249800	SHIM	1		K02057/9410		60		
102	4644.351.091		SPUR GEAR	1		K02483/9510	Z=54	5,400		
110	0730.150.777	00655266	THRUST WASHER	1				6		
130	0750.118.111	00640756	CYROLLBEARING	1			35,0X81,5X40,8	1		
170	4644.351.094	3150367800	THRUST PLATE	1		K00427/9610		35		
174	4642.308.555	ZM 2905088	THRUST PLATE	1		K00597/9610		45		
310	0730.150.779	00655267	THRUST WASHER	1				6		
318	4644.252.086		SPUR GEAR	1			Z=60	8,600		
360	0750.115.211	00640758	ROLLER CAGE	1			45X75X57	0,820		
370	0501.308.830	ZM 2286393	ANGLE RING	3				10		

© All rights reserved by ZF Friedrichshafen AG 2011, even in the event of applications for copyright. We hold all rights of disposal, such as the right to copy and disseminate. All rights reserved. **22.12.2011**
For information only, not subject to the amendment service. **33**

Material number: 4644.034.002 **4 WG 201(5) /**
Plant: 464415313100 **COUPLING**
Material-assembly-group-no: 4644.153.123

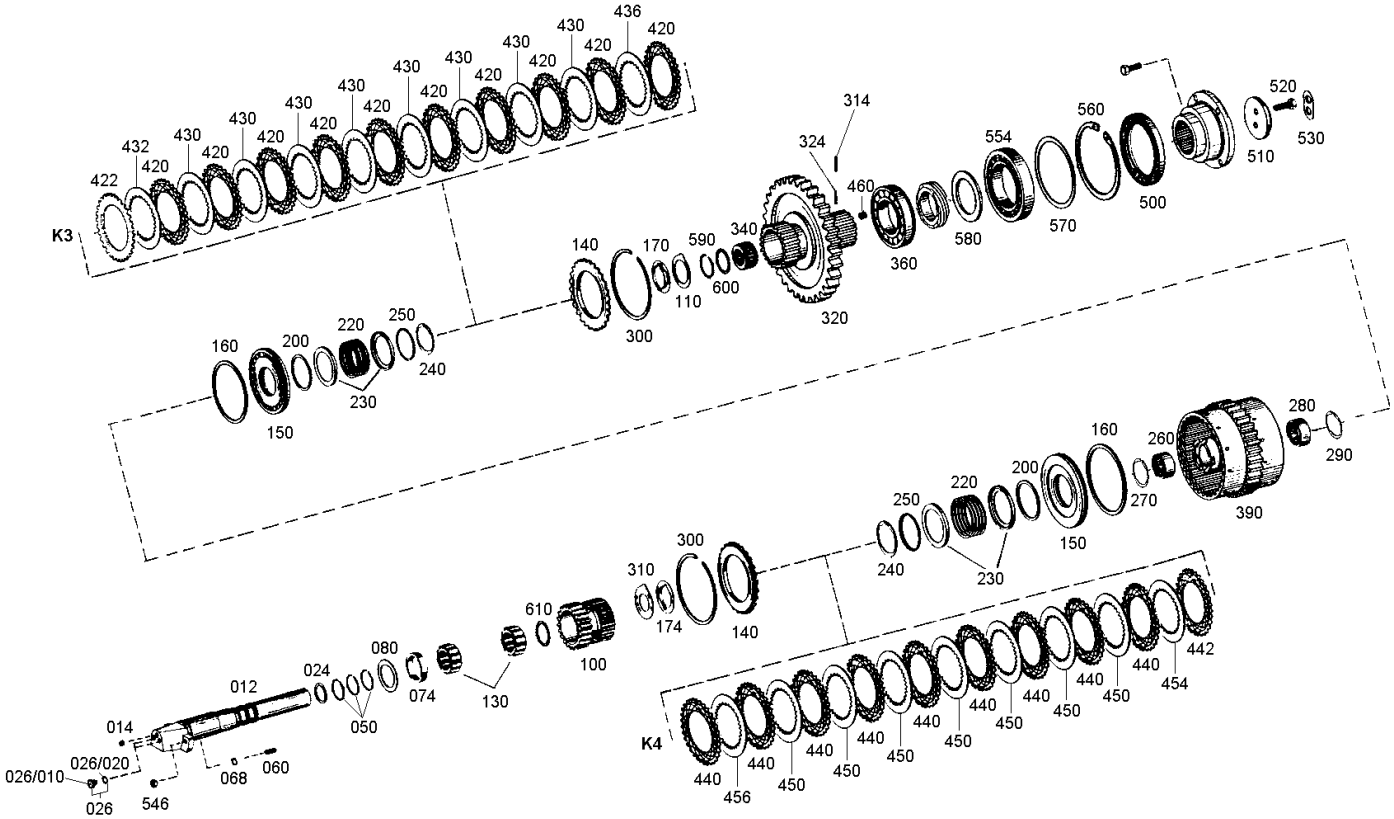

© All rights reserved by ZF Friedrichshafen AG 2011, even in the event of applications for copyright. We hold all rights of disposal, such as the right to copy and disseminate. All rights reserved. **22.12.2011**
For information only, not subject to the amendment service. **34**

Parts list

Material number: 4644.034.002 **4 WG 201(5) /**
Plant: 464415313100
Material-assembly-group-no: 4644.153.123

Pos.	Material number	Customer material	Name	Quantity	ME	Amend. no.	Techn. Info.	Weight	Rep kit	Alternative material
12	4644.353.056		AXLE	1				2,970		
14	0635.460.017	34997300	BALL	1			8,5	0,003		
24	0634.313.056	00579163	O-RING	1			37X3	0,002		
26	---		SCREW PLUG	2				5		
/20	0634.303.280	00663058	O-RING	1			8X1,5	0,070		
50	0734.401.106	00560834	PISTON RING	3				2		
60	0636.610.014	1000000410	STUD	2			M8X18	0,009		
68	0634.316.171		O-RING	2			7,5X1,5	0,001		
74	0730.161.502		BUSH	1				235		
80	---		SHIM	1				0,000		
---	0730.003.487		SHIM	1				4		
---	0730.003.488		SHIM	1				8		
---	0730.003.489		SHIM	1			42,1X70X0,6	11		
---	0730.003.490		SHIM	1				15		
---	0730.003.491		SHIM	1			42,1X70X1	0,019		
---	0730.003.492		SHIM	1			42,1X70X1,2	22		
---	0730.003.493		SHIM	1			42,1X70X1,4	27		
---	0730.003.494		SHIM	1			42,1X70X1,6	31		
---	0730.003.495		SHIM	1				36		
---	0730.003.496		SHIM	1			42,1X70X2	39		
---	0730.003.497		SHIM	1			42,1X70X2,2	0,040		
---	0730.003.498		SHIM	1				44		
100	4644.303.515		SPUR GEAR	1				1,600		
110	0730.150.777	00655266	THRUST WASHER	1				6		
130	0750.118.222		ROLLER BEARING	1			40,0X71,5X36,0	0,535		
140	4642.308.185	1000002085	END SHIM	2				0,320		
150	4644.353.062	252390	PISTON	2				0,300		
160	0750.112.141	00560860	PROFILE SEALING RING	2			109X120,4X2,5	5		
170	4644.351.094	3150367800	THRUST PLATE	1				35		
174	4644.351.094	3150367800	THRUST PLATE	1				35		
200	0750.112.140	00560806	PROFILE SEALING RING	2			60X71,4X2,5	4		

© All rights reserved by ZF Friedrichshafen AG 2011, even in the event of applications for copyright. We hold all rights of disposal, such as the right to copy and disseminate. All rights reserved. **22.12.2011**
For information only, not subject to the amendment service.

Material number: 4644.034.002 **4 WG 201(5) /**
Plant: 464415313100
Material-assembly-group-no: 4644.153.123

Pos.	Material number	Customer material	Name	Quantity	ME	Amend. no.	Techn. Info.	Weight	Rep kit	Alternative material
220	0732.041.183	1000000890	COMPRSPRING	2				157		
230	4642.308.083	1000002083	GUIDE RING	4				10		
240	0630.531.346	00560874	V-RING	2				12		
250	4642.308.084	1000002084	GUIDE RING	2				4,500		
260	0635.303.203	00560868	NEEDLE SLEEVE	1			35X42X26	66		
270	0730.513.610	3150368000	SNAP RING	1				5		
280	0635.303.204	1000000316	NEEDLE SLEEVE	1			40X47X20	0,056		
290	0730.513.611	3150368100	SNAP RING	1				5		
300	---		SNAP RING	2				0,000		
---	0730.513.180	1000000883	SNAP RING	2				26		
---	0730.513.416	1.115-00355	SNAP RING	2				30		
---	0730.513.417	SA 8320-27540	SNAP RING	2				25,400		
---	0730.513.418	185441A1	SNAP RING	2				24,900		
---	0730.513.419	185440A1	SNAP RING	2				24		
---	0730.513.420	SA 8320-27550	SNAP RING	2				23,700		
---	0730.513.421	1.115-00350	SNAP RING	2				23,010		
---	0730.513.455	1.115-00349	SNAP RING	2				23		
---	0730.513.456	SA 8320-27560	SNAP RING	2				26		
310	0730.150.776	A03707-15076	THRUST WASHER	1				0,006		
314	0631.329.003		SLOTPIN	1			2,5X8	0,005		
320	4644.353.060		SPUR GEAR	1			Z=39	11,800		
324	0631.329.124	1000000245	SLOTPIN	1			1,5X5	0,001		
340	0735.358.069	00640759	NEEDLE CAGE	1			K 35,000X50,060X30,400	0,146		
360	0750.118.323	00640740	ROLLER BEARING	1			70,0X125,0X31,0	1		
390	4644.253.049		DISC CARRIER	1			VERSION II	6		
420	0501.309.329	00560888	OCLUTCH DISC	10				95		
422	0501.312.280	50363648	OCLUTCH DISC	1				105		
430	4642.308.330	00560890	ICLUTCH DISC	8			S=1,5 Z=29	84		
432	4642.308.332	00560836	ICLUTCH DISC	1			S=2,0 Z=29	114		
436	---		ICLUTCH DISC	1				0,000		
---	4642.308.332	00560836	ICLUTCH DISC	1			S=2,0 Z=29	114		

© All rights reserved by ZF Friedrichshafen AG 2011, even in the event of applications for copyright. We hold all rights of disposal, such as the right to copy and disseminate. All rights reserved. **22.12.2011**
For information only, not subject to the amendment service. **36**

Material number: 4644.034.002 **4 WG 201(5) /**
Plant: 464415313100
Material-assembly-group-no: 4644.153.123

Pos.	Material number	Customer material	Name	Quantity	ME	Amend. no.	Techn. Info.	Weight	Rep kit	Alternative material
---	4642.308.330	00560890	ICLUTCH DISC	1			S=1,5 Z=29	84		
---	4642.308.331	00560838	ICLUTCH DISC	1			S=2,5 Z=29	90		
440	0501.309.329	00560888	OCLUTCH DISC	9				95		
442	0501.312.280	50363648	OCLUTCH DISC	1				105		
450	4642.308.332	00560836	ICLUTCH DISC	7			S=2,0 Z=29	114		
454	4642.308.331	00560838	ICLUTCH DISC	1			S=2,5 Z=29	90		
456	---		ICLUTCH DISC	1				0,000		
---	4642.308.332	00560836	ICLUTCH DISC	1			S=2,0 Z=29	114		
---	4642.308.330	00560890	ICLUTCH DISC	1			S=1,5 Z=29	84		
---	4642.308.331	00560838	ICLUTCH DISC	1			S=2,5 Z=29	90		
460	0631.610.013		SET SCREW	2			M12X10	0,004		
500	0734.310.410		SHAFT SEAL	1				250		
510	4644.303.537		TENSION PLATE	1				480		
520	0636.016.014	104006927	HEXAGON BOLT	2			M12X30	39		
530	1250.304.353	00560852	TAB WASHER	1				14		
546	0637.011.538		HEXAGON NUT	2			M8	5,300		
554	0635.331.393	00640742	BALL BEARING	1			90X140X24	1,350		
560	0630.502.051	190003934540	RETAINING RING	1			140X4	107		
570	---		WASHER	1				0,000		
---	0730.101.274		WASHER	1			A=1,25	34		
---	0730.101.275		WASHER	1			120X139,8X1	25		
---	0730.104.120	MX252071	WASHER	1			S=0,8	20		
---	0730.104.121		WASHER	1			120X139,8X0,9	22		
---	0730.104.122		WASHER	1			120X139,8X1,1	29		
580	0730.104.119		RING	1				139		
590	0630.513.008	2150019500	SNAP RING	1				0,004		
600	0730.104.193		INTERMWASHER	1				0,010		
610	0730.107.619		WASHER	1				60		

© All rights reserved by ZF Friedrichshafen AG 2011, even in the event of applications for copyright. We hold all rights of disposal, such as the right to copy and disseminate. All rights reserved.

Material number: 4644.034.002 **4 WG 201(5) /**
Plant: 464415311100 **COUPLING**
Material-assembly-group-no: 4644.153.414

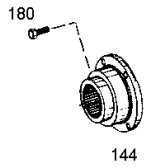

© All rights reserved by ZF Friedrichshafen AG 2011, even in the event of applications for copyright. We hold all rights of disposal, such as the right to copy and disseminate. All rights reserved.
For information only, not subject to the amendment service.

Parts list

Material number: 4644.034.002 **4 WG 201(5) /**
Plant: 464415311100
Material-assembly-group-no: 4644.153.414

Pos.	Material number	Customer material	Name	Quantity	ME	Amend. no.	Techn. Info.	Weight	Rep kit	Alternative material
144	4644.303.411		OUTPUT FLANGE	1				2,450		
180	0636.021.083		HEXAGON BOLT	4			M12X1,5X45	50		

© All rights reserved by ZF Friedrichshafen AG 2011, even in the event of applications for copyright. We hold all rights of disposal, such as the right to copy and disseminate. All rights reserved.

Material number: 4644.034.002 **4 WG 201(5) /**
Plant: 464415400100 **POWER TAKE-OFF**
Material-assembly-group-no: 4644.154.018

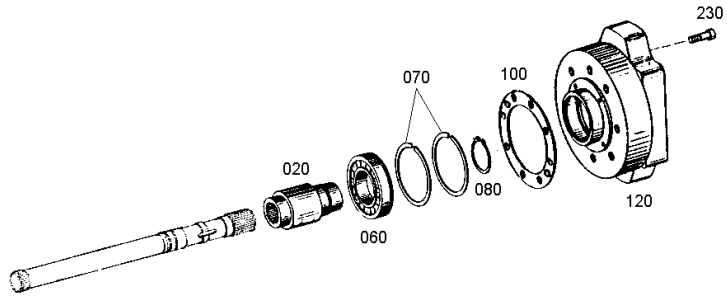

© All rights reserved by ZF Friedrichshafen AG 2011, even in the event of applications for copyright. We hold all rights of disposal, such as the right to copy and disseminate. All rights reserved.

Parts list

Material number: 4644.034.002 **4 WG 201(5) /**
Plant: 464415400100
Material-assembly-group-no: 4644.154.018

Pos.	Material number	Customer material	Name	Quantity	ME	Amend. no.	Techn. Info.	Weight	Rep kit	Alternative material
20	4644.311.074		DRIVER	1				1,175		
60	0750.116.259	00640752	BALL BEARING	1			45X85X19	399		
70	0630.503.011	1000000221	SNAP RING	2				0,020		
80	0630.501.033	1000000208	RETAINING RING	1			45X1,75	5		
100	4644.311.207	50230517	GASKET	1				0,013		
120	4644.311.063		PUMP FLANGE	1				3,420		
230	0636.015.120		HEXAGON BOLT	7			M10X25	25		

© All rights reserved by ZF Friedrichshafen AG 2011, even in the event of applications for copyright. We hold all rights of disposal, such as the right to copy and disseminate. All rights reserved. **22.12.2011**
For information only, not subject to the amendment service. **41**

Material number: 4644.034.002 **4 WG 201(5) /**
Plant: 464410630000 **GEAR SHIFT SYSTEM**
Material-assembly-group-no: 4644.106.300

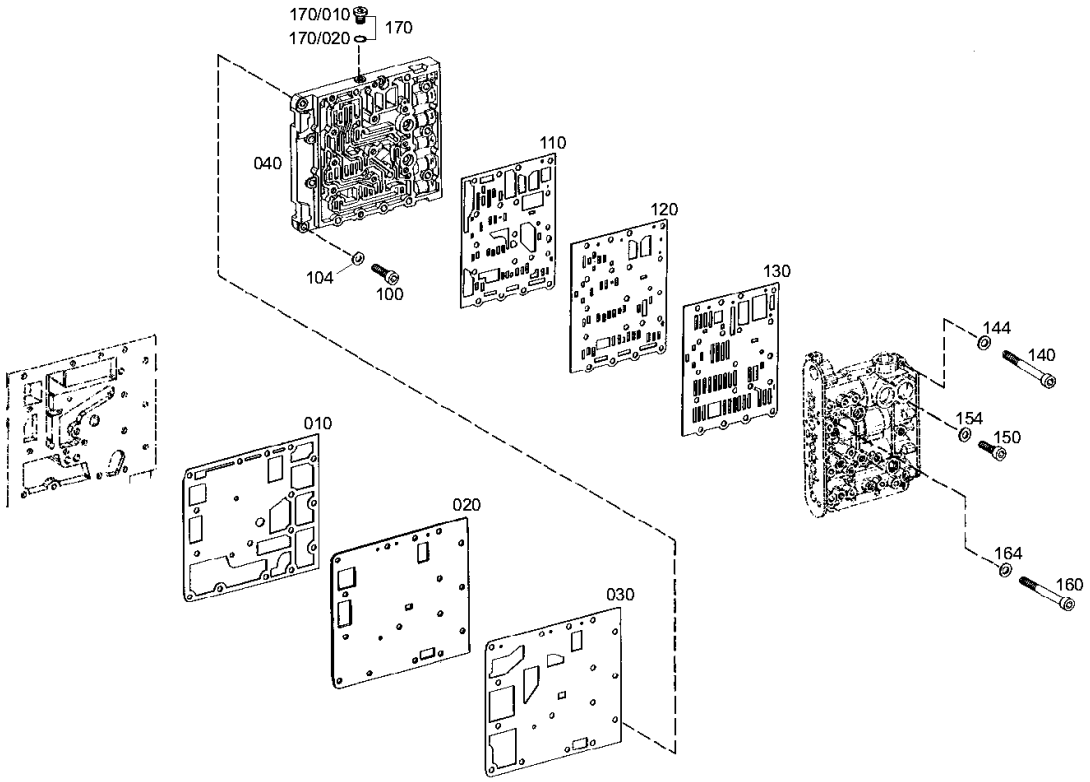

© All rights reserved by ZF Friedrichshafen AG 2011, even in the event of applications for copyright. We hold all rights of disposal, such as the right to copy and disseminate. All rights reserved. **22.12.2011**
For information only, not subject to the amendment service. **42**

Parts list

Material number: 4644.034.002 **4 WG 201(5) /**
Plant: 464410630000
Material-assembly-group-no: 4644.106.300

Pos.	Material number	Customer material	Name	Quantity	ME	Amend. no.	Techn. Info.	Weight	Rep kit	Alternative material
10	4644.306.362	00560810	GASKET	1				0,010		
20	4644.306.363	1000002168	COVER PLATE	1		K01772/9710		1,130		
30	4644.306.364	00560812	GASKET	1				27		
40	4644.306.365	1000002170	DUCT PLATE	1				1,780		
100	0636.102.173		CAP SCREW	11		K01357/0010	M8X35	15		
104	0630.003.006	1000000179	WASHER	11				1,200		
110	4644.306.497	00560816	GASKET	1				16,200		
120	4644.306.500	SA 8320-16400	COVER PLATE	1				488		
130	4644.306.370	00560818	GASKET	1				17,600		
140	0736.101.205		CAP SCREW	5		K01357/0010		29,200		
144	0630.003.006	1000000179	WASHER	5				1,200		
150	0736.101.203		CAP SCREW	11		K01357/0010		17		
154	0630.003.006	1000000179	WASHER	11				1,200		
160	0736.101.204		CAP SCREW	1		K01357/0010		26,900		
164	0630.003.006	1000000179	WASHER	1				1,200		
170	---		SCREW PLUG	1				5		
/20	0634.303.280	00663058	O-RING	1			8X1,5	0,070		

© All rights reserved by ZF Friedrichshafen AG 2011, even in the event of applications for copyright. We hold all rights of disposal, such as the right to copy and disseminate. All rights reserved. **22.12.2011**
For information only, not subject to the amendment service. **43**

Material number: 4644.034.002 **4 WG 201(5) /**
Plant: 464415930040 **GEAR SHIFT SYSTEM**
Material-assembly-group-no: 4644.159.300

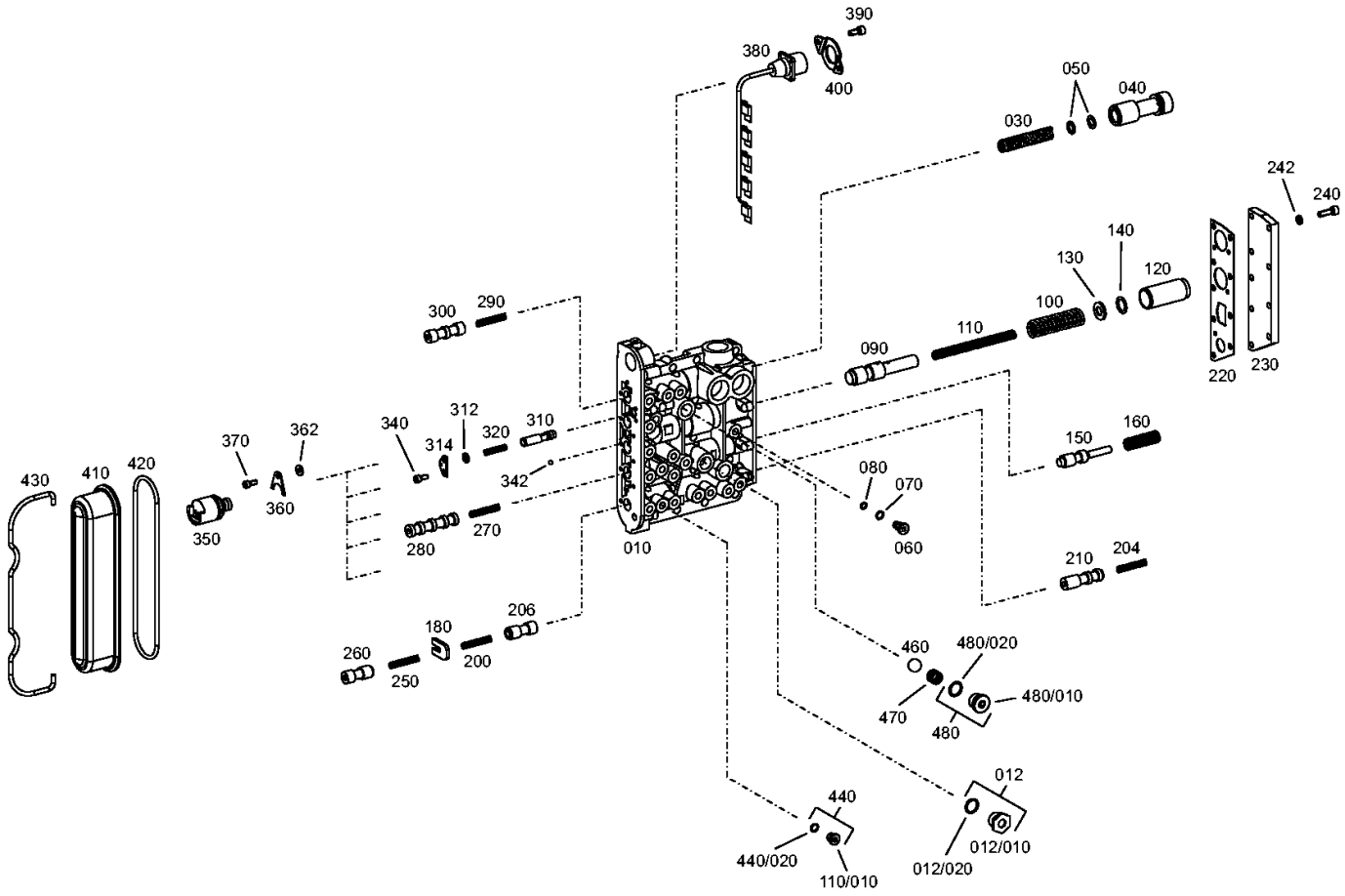

© All rights reserved by ZF Friedrichshafen AG 2011, even in the event of applications for copyright. We hold all rights of disposal, such as the right to copy and disseminate. All rights reserved. **22.12.2011**
For information only, not subject to the amendment service. **44**

Parts list

Material number: 4644.034.002 **4 WG 201(5) /**
Plant: 464415930040
Material-assembly-group-no: 4644.159.300

Pos.	Material number	Customer material	Name	Quantity	ME	Amend. no.	Techn. Info.	Weight	Rep kit	Alternative material
10	4644.306.560	185437A1	VALVE BLOCK	1				1,900		
12	---		SCREW-IN SLEEVE	1				30		
/10	4644.306.566	185438A1	SCREW-IN SLEEVE	1				30		
/20	0634.306.524	00560840	O-RING	1			15X2	0,002		
30	0732.042.314	1000000899	COMPRSPRING	1				0,042		
40	4644.306.597	251514A1	PISTON	1		K00945/0010		50		
50	0630.004.037	1000000181	SHIM RING	2			10X16X1	1		
60	---		ORIFICE	1				0,000		
---	4644.306.401	1000002187	ORIFICE	1				8		
---	4644.306.402	1000002188	ORIFICE	1				8		
---	4644.306.403	1000002189	ORIFICE	1				8		
---	4644.306.521	SA 8320-16450	ORIFICE	1				5		
---	4644.306.522	SA 8320-16460	ORIFICE	1				5		
---	4644.306.404	SA 8320-16290	ORIFICE	1				5		
---	4644.306.531	SA 8320-16480	ORIFICE	1				10		
---	4644.306.554	SA 8320-16530	ORIFICE	1				10		
70	0634.303.280	00663058	O-RING	1			8X1,5	0,070		
80	0634.306.170	1000000282	O-RING	1			6X1,5	0,001		
90	4644.306.376	1000002176	PISTON	1				20		
100	0732.042.315	1000000900	COMPRSPRING	1				0,040		
110	0732.042.316	00655263	COMPRSPRING	1				20		
120	4644.306.377	1000002177	PISTON	1				20		
130	4644.306.408	1000002190	WASHER	1				0,007		
140	---		SHIM RING	1			15X21	0,000		
---	0630.004.091		SHIM RING	1			15X21X2	1		
---	0630.004.081		SHIM RING	1			15X21X1	0,001		
---	0630.004.136		SHIM RING	1			15X21X0,5	0,001		
150	4644.306.509	00655264	PISTON	1				20		
160	0732.042.317	1000000902	COMPRSPRING	1				17,800		
180	4644.306.379	1000002179	STOP PLATE	1				15		
200	0770.060.648	1000001007	COMPRSPRING	1				5,500		

© All rights reserved by ZF Friedrichshafen AG 2011, even in the event of applications for copyright. We hold all rights of disposal, such as the right to copy and disseminate. All rights reserved.

Material number: 4644.034.002 **4 WG 201(5) /**
Plant: 464415930040
Material-assembly-group-no: 4644.159.300

Pos.	Material number	Customer material	Name	Quantity	ME	Amend. no.	Techn. Info.	Weight	Rep kit	Alternative material
204	0770.060.648	1000001007	COMPRSPRING	1				5,500		
206	4644.306.381	1000002180	PISTON	1				20		
210	4644.306.380	ZM 2291830	PISTON	1				20		
220	4644.306.584	1.180-00020	GASKET	1		K01377/9510		5		
230	4644.306.512		COVER	1				0,650		
240	0636.101.012	VOE6210858	CAP SCREW	9			M6X20	0,007		
242	0630.003.004	1000000178	WASHER	9				1		
250	0770.060.648	1000001007	COMPRSPRING	1				5,500		
260	4644.306.381	1000002180	PISTON	1				20		
270	0770.060.648	1000001007	COMPRSPRING	1				5,500		
280	4644.306.383	1000002181	PISTON	1				20		
290	0770.060.648	1000001007	COMPRSPRING	1				5,500		
300	4644.306.384	1000002182	PISTON	1				20		
310	4644.306.578	SA 8320-16580	REDUCTION VALVE	1		K00945/0010		5		
312	0730.007.565	35061500	RING	1			A=2,0	5		
314	4644.306.580	35061600	FIXING PLATE	1				5		
320	0732.042.024	1000000895	COMPRSPRING	1				4		
340	0636.101.129	1000000381	CAP SCREW	2			M5X12	0,003		
342	0635.460.005	1000000322	BALL	10			4,5	0,400		
350	0501.313.375	A8502873	SOLENOID VALVE	5		K01785/9510		0,080		
360	1043.326.045	1000001029	FIXING PLATE	5				0,003		
362	0730.004.292	1000000499	WASHER	5				1		
370	0636.101.129	1000000381	CAP SCREW	5			M5X12	0,003		
380	4644.206.035	1000002120	WIRING HARNESS	1				55		
390	0636.101.478	199064A1	CAP SCREW	2			M6X14	5,100		
400	4644.306.399	1000002186	FIXING PLATE	1				25		
410	4644.206.039	SA 8320-15200	COVER	1				350		
420	0634.349.606	00579045	O-RING	1			159,2X5,7	15		
430	4644.306.388	1000003505	CLAMP	1				65		
440	---		SCREW PLUG	8				5		
/20	0634.303.280	00663058	O-RING	1			8X1,5	0,070		

© All rights reserved by ZF Friedrichshafen AG 2011, even in the event of applications for copyright. We hold all rights of disposal, such as the right to copy and disseminate. All rights reserved. **22.12.2011**
For information only, not subject to the amendment service. **46**

Material number: 4644.034.002 **4 WG 201(5) /**
Plant: 464415930040
Material-assembly-group-no: 4644.159.300

Pos.	Material number	Customer material	Name	Quantity	ME	Amend. no.	Techn. Info.	Weight	Rep kit	Alternative material
460	0635.460.027	1000000326	BALL	2			16	17		
470	0732.041.226	1000000891	COMPRSPRING	2				0,001		
480	---		SCREW PLUG	2			M18X1,5 KPL.MIT O-RING	30		
/20	0634.306.524	00560840	O-RING	1			15X2	0,002		

© All rights reserved by ZF Friedrichshafen AG 2011, even in the event of applications for copyright. We hold all rights of disposal, such as the right to copy and disseminate. All rights reserved. **22.12.2011**
For information only, not subject to the amendment service. **47**

Material number: 4644.034.002 **4 WG 201(5) /**
Plant: 464412020100 **PRESSURE REGULATOR**
Material-assembly-group-no: 4644.120.201

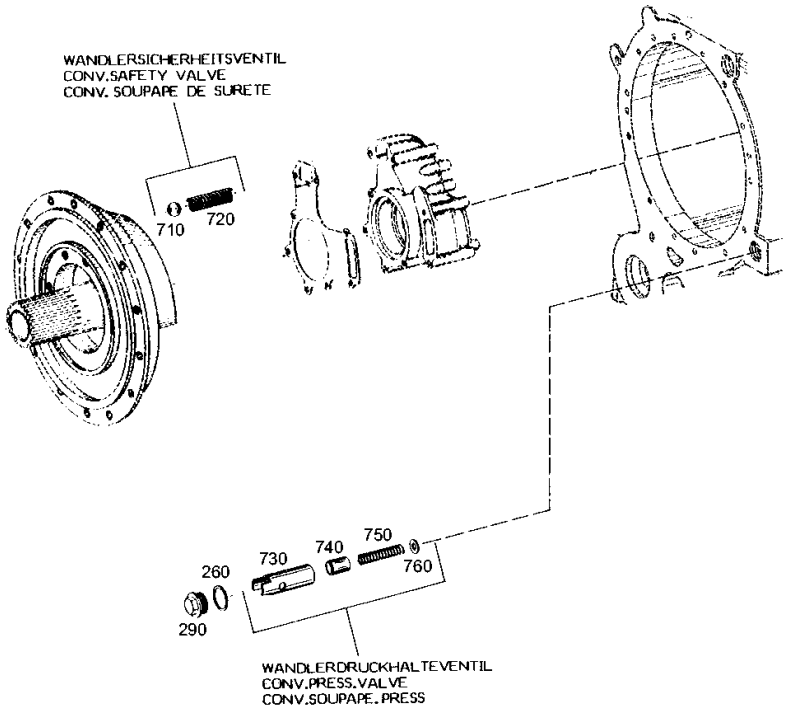

© All rights reserved by ZF Friedrichshafen AG 2011, even in the event of applications for copyright. We hold all rights of disposal, such as the right to copy and disseminate. All rights reserved. **22.12.2011**
For information only, not subject to the amendment service. **48**

Parts list

Material number: 4644.034.002 **4 WG 201(5) /**
Plant: 464412020100
Material-assembly-group-no: 4644.120.201

Pos.	Material number	Customer material	Name	Quantity	ME	Amend. no.	Techn. Info.	Weight	Rep kit	Alternative material
260	0634.303.283	VOE6213183	O-RING	1			27X2,5	1		
290	0636.305.024	1000000406	SCREW PLUG	1			M30X1,5	80		
710	0635.460.029	1000000327	BALL	1			20	33		
720	0732.041.352	1000000893	COMPRSPRING	1				0,023		
730	4644.320.042	1000002216	VALVE BUSH	1				100		
740	4644.320.034	1000002215	PISTON	1				58		
750	0732.042.251	1000000898	COMPRSPRING	1				0,039		
760	0630.001.017	1000000175	WASHER	1				0,007		

© All rights reserved by ZF Friedrichshafen AG 2011, even in the event of applications for copyright. We hold all rights of disposal, such as the right to copy and disseminate. All rights reserved.

Material number: 4644.034.002 **4 WG 201(5) /**
Plant: 464413800100 **FILTER**
Material-assembly-group-no: 4644.138.001

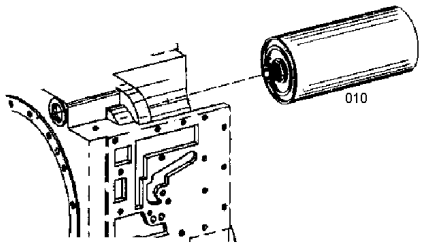

© All rights reserved by ZF Friedrichshafen AG 2011, even in the event of applications for copyright. We hold all rights of disposal, such as the right to copy and disseminate. All rights reserved.
For information only, not subject to the amendment service.

Parts list

Material number: 4644.034.002 **4 WG 201(5) /**
Plant: 464413800100
Material-assembly-group-no: 4644.138.001

Pos.	Material number	Customer material	Name	Quantity	ME	Amend. no.	Techn. Info.	Weight	Rep kit	Alternative material
10	0750.131.053	507419015	EXCHANGE FILTER	1		K02160/9910		0,938		

© All rights reserved by ZF Friedrichshafen AG 2011, even in the event of applications for copyright. We hold all rights of disposal, such as the right to copy and disseminate. All rights reserved. **22.12.2011**
For information only, not subject to the amendment service. **51**

Material number: 4644.034.002 **4 WG 201(5) /**
Plant: 464412510600 **INDTRANSMITTER**
Material-assembly-group-no: 4644.125.007

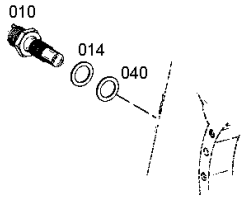

© All rights reserved by ZF Friedrichshafen AG 2011, even in the event of applications for copyright. We hold all rights of disposal, such as the right to copy and disseminate. All rights reserved.
For information only, not subject to the amendment service.

Parts list

Material number: 4644.034.002 **4 WG 201(5) /**
Plant: 464412510600
Material-assembly-group-no: 4644.125.007

Pos.	Material number	Customer material	Name	Quantity	ME	Amend. no.	Techn. Info.	Weight	Rep kit	Alternative material
10	0501.317.160	00605077	INDTRANSMITTER	1		K00396/9810		88		
14	0634.801.155	1000000310	SEALING RING	1			18X24	2		
40	---		SHIM RING	1				0,020		
---	0630.004.030	1000000180	SHIM RING	1			18X25X1,5	0,003		
---	0630.004.040	1000000182	SHIM RING	1			18X25X1,4	2		
---	0630.004.041	1000000183	SHIM RING	1			18X25X1,2	2		
---	0630.004.042	1000000184	SHIM RING	1			18X25X1	0,002		

© All rights reserved by ZF Friedrichshafen AG 2011, even in the event of applications for copyright. We hold all rights of disposal, such as the right to copy and disseminate. All rights reserved.

Material number: 4644.034.002 **4 WG 201(5) /**
Plant: 464410700100 **SPEEDO**
Material-assembly-group-no: 4644.107.401

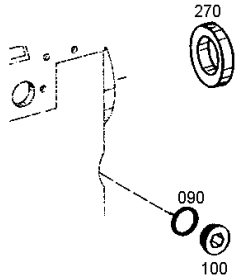

© All rights reserved by ZF Friedrichshafen AG 2011, even in the event of applications for copyright. We hold all rights of disposal, such as the right to copy and disseminate. All rights reserved.
For information only, not subject to the amendment service.

Parts list

Material number: 4644.034.002 **4 WG 201(5) /**
Plant: 464410700100
Material-assembly-group-no: 4644.107.401

Pos.	Material number	Customer material	Name	Quantity	ME	Amend. no.	Techn. Info.	Weight	Rep kit	Alternative material
90	0634.801.251	0760303297	SEALING RING	1			36X42	5		
100	0636.302.018	1000000399	SCREW PLUG	1			M36X1,5	137		
270	4644.308.419		BUSH	1				680		

© All rights reserved by ZF Friedrichshafen AG 2011, even in the event of applications for copyright. We hold all rights of disposal, such as the right to copy and disseminate. All rights reserved.

Material number: 4644.034.002 **4 WG 201(5) /**
Plant: 464413111100 **FILLER NECK**
Material-assembly-group-no: 4644.131.004

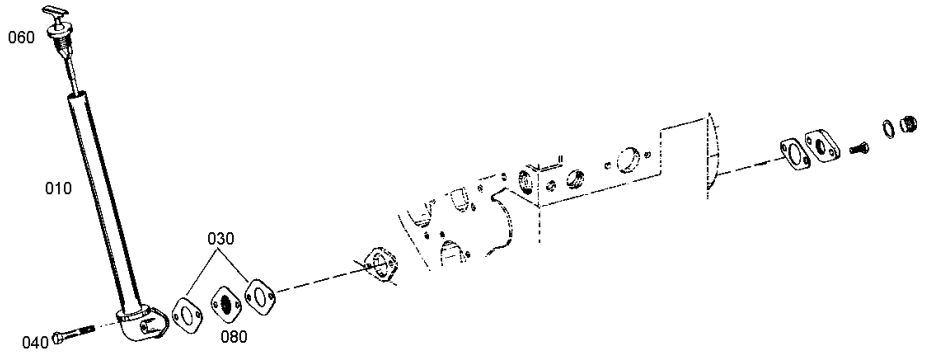

© All rights reserved by ZF Friedrichshafen AG 2011, even in the event of applications for copyright. We hold all rights of disposal, such as the right to copy and disseminate. All rights reserved. **22.12.2011**
For information only, not subject to the amendment service. **56**

Parts list

Material number: 4644.034.002 **4 WG 201(5) /**
Plant: 464413111100
Material-assembly-group-no: 4644.131.004

Pos.	Material number	Customer material	Name	Quantity	ME	Amend. no.	Techn. Info.	Weight	Rep kit	Alternative material
10	4642.231.127	50469440	OIL LEVEL TUBE	1				765		
30	4642.331.216	50160668	GASKET	2		K01764/9510		0,001		
40	0636.010.089	00553562	HEXAGON BOLT	2			M8X50	0,022		
60	4644.231.087	00553561	OIL DIPSTICK	1				0,101		
80	4642.331.056	50160669	BAFFLE PLATE	1				0,013		

© All rights reserved by ZF Friedrichshafen AG 2011, even in the event of applications for copyright. We hold all rights of disposal, such as the right to copy and disseminate. All rights reserved.

Plant

Material number: 4644.034.002 **4 WG 201(5) /**
Plant: 464413140100 **FILLER NECK**
Material-assembly-group-no: 4644.131.401

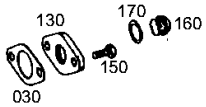

© All rights reserved by ZF Friedrichshafen AG 2011, even in the event of applications for copyright. We hold all rights of disposal, such as the right to copy and disseminate. All rights reserved.

Parts list

Material number: 4644.034.002 **4 WG 201(5) /**
Plant: 464413140100
Material-assembly-group-no: 4644.131.401

Pos.	Material number	Customer material	Name	Quantity	ME	Amend. no.	Techn. Info.	Weight	Rep kit	Alternative material
30	4642.331.216	50160668	GASKET	1		K01764/9510		0,001		
130	4644.301.016	ZM 2283413	COVER PLATE	1			E=8	0,095		
150	0636.015.289	SA 8320-03490	HEXAGON BOLT	2			M8X16	10		
160	0636.305.016	SA 8320-03980	SCREW PLUG	1			M22X1,5	36		
170	0634.801.074	1000000307	SEALING RING	1			22X27	2,100		

© All rights reserved by ZF Friedrichshafen AG 2011, even in the event of applications for copyright. We hold all rights of disposal, such as the right to copy and disseminate. All rights reserved.

Material number: 4644.034.002 **4 WG 201(5) /**
Plant: 464412110700 **OIL PIPE**
Material-assembly-group-no: 4644.121.101

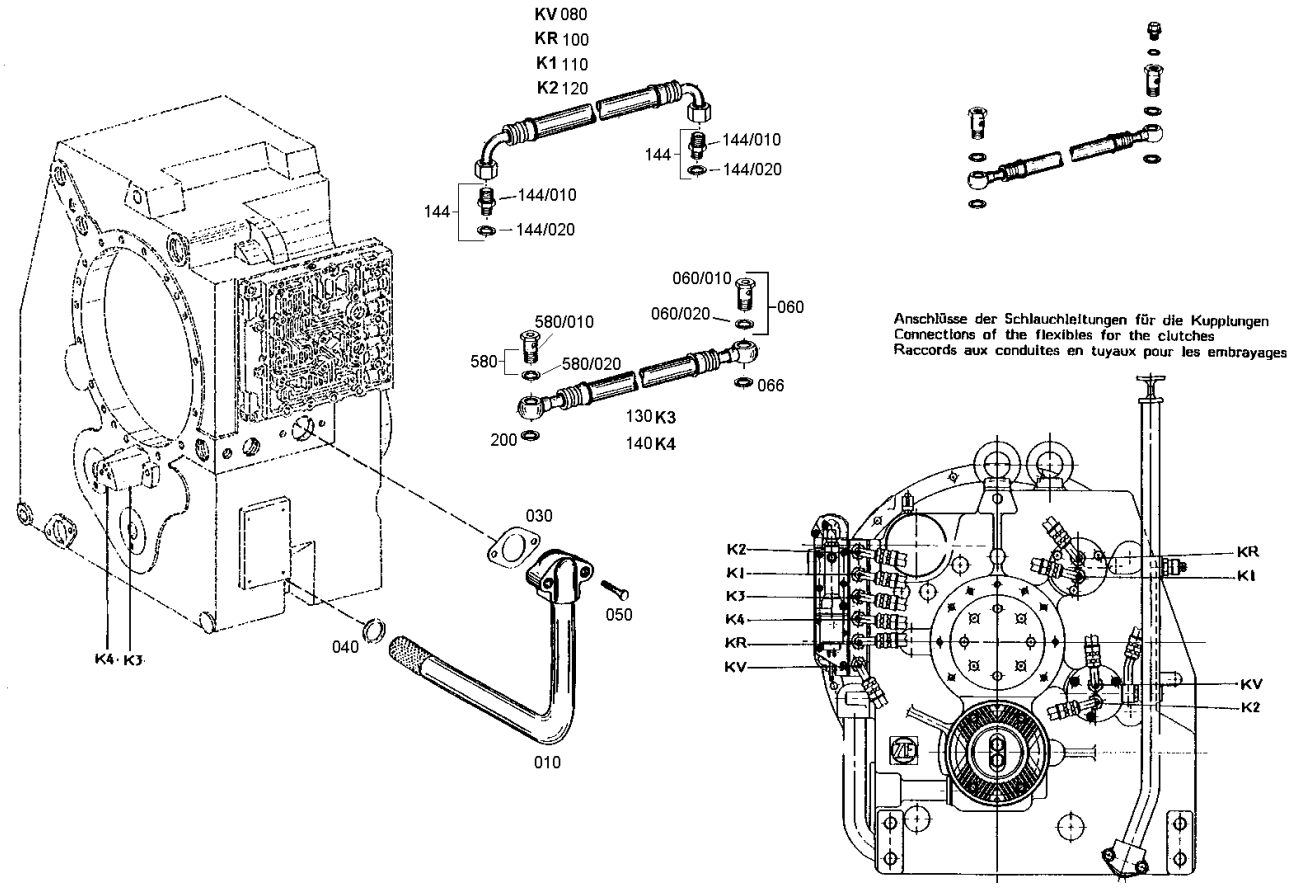

© All rights reserved by ZF Friedrichshafen AG 2011, even in the event of applications for copyright. We hold all rights of disposal, such as the right to copy and disseminate. All rights reserved. **22.12.2011**
For information only, not subject to the amendment service. **60**

Parts list

Material number: 4644.034.002 **4 WG 201(5) /**
Plant: 464412110700
Material-assembly-group-no: 4644.121.101

Pos.	Material number	Customer material	Name	Quantity	ME	Amend. no.	Techn. Info.	Weight	Rep kit	Alternative material
10	4644.221.076		SUCTION TUBE	1				1,140		
30	4644.321.244	1000005833	GASKET	1		K02795/9410		2,010		
40	0634.313.353	00567810	O-RING	1			34X4	2,800		
50	0636.010.089	00553562	HEXAGON BOLT	2			M8X50	0,022		
60	---		UNION SCREW	2		K00328/0310		45		
/20	0634.306.523	1000000291	O-RING	1			13X2	0,200		
66	0634.306.202	1000000284	O-RING	2			18X2,5	1		
80	0750.147.037	1000001003	HOSE PIPE	1				0,268		
100	0750.147.036	00655265	HOSE PIPE	1				0,248		
110	0750.147.005	50156726	HOSE PIPE	1				0,226		
120	0750.147.037	1000001003	HOSE PIPE	1				0,268		
130	0750.147.129	00567994	HOSE PIPE	1				0,241		
140	0750.147.130		HOSE PIPE	1				280		
144	---		SCREW-IN SLEEVE	8				45		
/20	0634.306.523	1000000291	O-RING	1			13X2	0,200		
200	0634.306.193	023213R1	O-RING	2			16X2,5	0,040		
580	---		UNION SCREW	2				25		
/20	0634.306.522	104006806	O-RING	1			11X2	0,100		

© All rights reserved by ZF Friedrichshafen AG 2011, even in the event of applications for copyright. We hold all rights of disposal, such as the right to copy and disseminate. All rights reserved. **22.12.2011**
For information only, not subject to the amendment service. **61**

Material number: 4644.034.002 **4 WG 201(5) /**
Plant: 464219911500 **LOOSE PARTS**
Material-assembly-group-no: 4642.199.265

There is presently no plate available for this parts list/ assembly.

© All rights reserved by ZF Friedrichshafen AG 2011, even in the event of applications for copyright. We hold all rights of disposal, such as the right to copy and disseminate. All rights reserved.
For information only, not subject to the amendment service.

Parts list

Material number: 4644.034.002 **4 WG 201(5) /**
Plant: 464219911500
Material-assembly-group-no: 4642.199.265

Pos.	Material number	Customer material	Name	Quantity	ME	Amend. no.	Techn. Info.	Weight	Rep kit	Alternative material
16	4623.328.013		GASKET	1				0,005		
870	0634.303.280	00663058	O-RING	1			8X1,5	0,070		

© All rights reserved by ZF Friedrichshafen AG 2011, even in the event of applications for copyright. We hold all rights of disposal, such as the right to copy and disseminate. All rights reserved. **22.12.2011**
For information only, not subject to the amendment service. **63**

Material number: 4644.034.002 **4 WG 201(5) /**
Plant: 464418302400 **LOOSE PARTS**
Material-assembly-group-no: 4644.183.044

There is presently no plate available for this parts list/ assembly.

© All rights reserved by ZF Friedrichshafen AG 2011, even in the event of applications for copyright. We hold all rights of disposal, such as the right to copy and disseminate. All rights reserved.
For information only, not subject to the amendment service.

Parts list

Material number: 4644.034.002 **4 WG 201(5) /**
Plant: 464418302400
Material-assembly-group-no: 4644.183.044

Pos.	Material number	Customer material	Name	Quantity	ME	Amend. no.	Techn. Info.	Weight	Rep kit	Alternative material
20	6029.204.937		CABLE GENERAL	1				1,210		
22	6029.201.181	901315005	CABLE GENERAL	1				0,580		
40	0501.216.205	SA 8320-00710	RANGE SELECTOR	1				1,290		
55	6029.199.007	1.181-00027	PLUG KIT	1				20		
/110	6029.201.122		PLUG	1				50		
58	6029.201.186	901315006	CABLE GENERAL	2				190		
60	6029.199.005	00516489	PLUG KIT	1				20		
/110	6029.201.042		PLUG	1				0,000		
65	6029.199.014		PLUG KIT	1				23		
/110	6029.201.123		PLUG	1				0,000		

© All rights reserved by ZF Friedrichshafen AG 2011, even in the event of applications for copyright. We hold all rights of disposal, such as the right to copy and disseminate. All rights reserved.